QUICK INSTALL

TIME SAVING

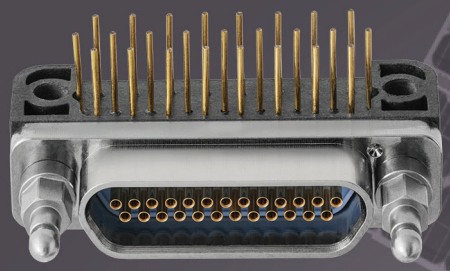

Micro-D D-Click® connectors

Fast-latching solutions

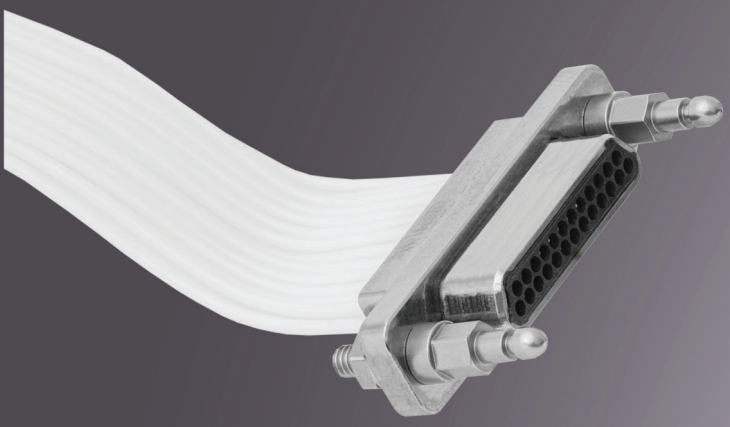

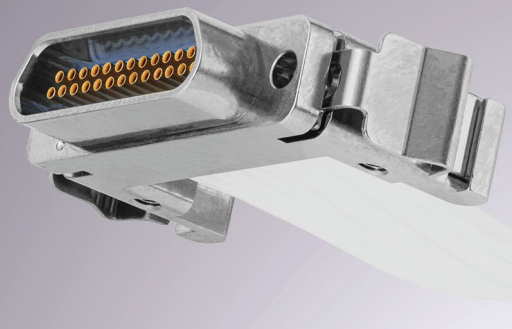

www.axon-cable.com

axon' cables & connectors

AXON' CABLE D-Click® connectors

axon' cables & connectors

THE INFORMATION IN THIS CATALOGUE IS ACCURATE TO THE BEST OF OUR KNOWLEDGE AT TIME OF PUBLISHING, HOWEVER, AXON' CANNOT BE HELD LIABLE FOR ANY ERRORS MADE AS A RESULT OF INFORMATION CONTAINED HEREIN. CHANGES AND MODIFICATIONS CAN BE MADE TO THIS BROCHURE AT ANY TIME WITHOUT PRIOR NOTICE.

Fast-latching connectors

Introduction to Micro-D D-Click® connectors - 6
D-Click® fast-latching system - 12
Panel mounting guide - 13
D-Click® hardware - 16

Page 5

D-Click® standard connectors

General information - 20
Micro-D D-Click® Pigtail connectors - 22
Micro-D D-Click® Solder Cup connectors - 25
Micro-D D-Click® Right Angle PCB connectors - 28
Micro-D D-Click® Straight PCB connectors - 39
Micro-D D-Click® savers - 48
Custom designed connectors - 51

Page 19

D-Click® connectors for space

General information - 54
ESCC Micro-D D-Click® Pigtail connectors - 56
ESCC Micro-D D-Click® PCB connectors - 59
ESCC Micro-D D-Click® Jumper links - 72
Custom designed connectors - 74

Page 53

Wires & accessories

Wires codes for D-Click® connectors - 76
Wires codes for D-Click® connectors for space applications - 77
Colour codes - 78
Micro-D D-Click® backshells - 80
Axoclamp® EMI band termination - 84

Page 75

AXON' CABLE D-Click® connectors

Fast-latching connectors

Introduction to Micro-D D-Click® connectors - 6

Glossary of terms - 8

D-Click® connectors weights - 9

Contact arrangements - 10

D-Click® fast-latching system - 12

Panel mounting guide - 13

Panel cutouts - 14

D-Click® hardware - 16

DC Tabs - 18

©2018, AXON'CABLE - RELEASED SEPTEMBER 2025/C - www.axon-cable.com





Introduction to Micro-D

Headquartered in the beautiful Champagne region of France, AXON' is a worldwide leader in specialist interconnect. The company excels in the design and manufacture of wires, cables, terminated harnesses and interconnect solutions for high technology applications.
As a specialist in advanced interconnect solutions, Axon' Cable has extensive experience in Micro-D connectors including:

- pigtail and PCB connectors,
- solder cup connectors,
- QPL qualified Micro-D to MIL-DTL-83513 connectors,
- micro-strip and saver connectors.

ULTRA-FAST CONNECTION

Axon' Cable has developed miniature connectors equipped with a user-friendly latching system which gives greater flexibility to customers. A new range of Micro-D products equipped with the **D-Click®** fast latching system allows customers to use the Micro-D technology in space constrained systems where access to the connectors is difficult. The innovative type of connectors generates real time savings as no tooling is required for this operation.

A FAST LATCHING SYSTEM: ONE CLICK AND YOU'RE DONE!

Axon' Cable has enlarged their range of highly reliable Micro-D connectors by developing **D-Click®** fast latching connectors. Equipped with an easy-to-use mating and latching system, this range of Micro-D connectors enables a much faster installation during harness integration. **D-Click®** connectors are available from **9** to **51** ways.

The D-Click® Micro-D connector range includes:

- Pigtail & PCB connectors,
- Backshells including EMI optimized version,
- Custom designed connectors.

How does the D-Click® system work?
A very **quick** connection / disconnection:

- Latch-posts on one connector serve as guide pins into the shell of the mating connector, on which two latch springs then trap the waisted latch-posts for a very fast and reliable connection,
- Just squeeze the **D-Click®** latch springs together to disconnect.

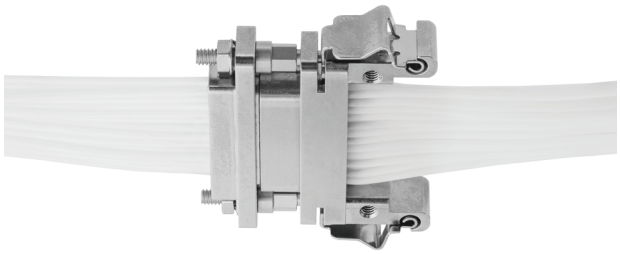

WHY CHOOSE D-CLICK® FAST LATCHING CONNECTORS?

- No hardware and no tooling required for the connection: time-saving solution for harness integration.
- Very easy to move from standard Micro-D technology to **D-Click®** connectors: no mechanical changes required to either the PCB layout or to the equipment panel cut-outs.
- The **D-Click®** latching system can make it easier to use Micro-D technology in systems where gaining access with tools could be difficult.
- These low-insertion-force connectors equipped with Twist Pin contacts have been tested to the MIL-DTL-83513 and meet the performance requirements of the standard.
- The Micro-D **D-Click®** range includes connectors which have been fully qualified according to ESCC 3401/091. They are particularly designed for space applications, where integration time is a key issue.

©2018, AXON'CABLE - RELEASED SEPTEMBER 2025/C - www.axon-cable.com

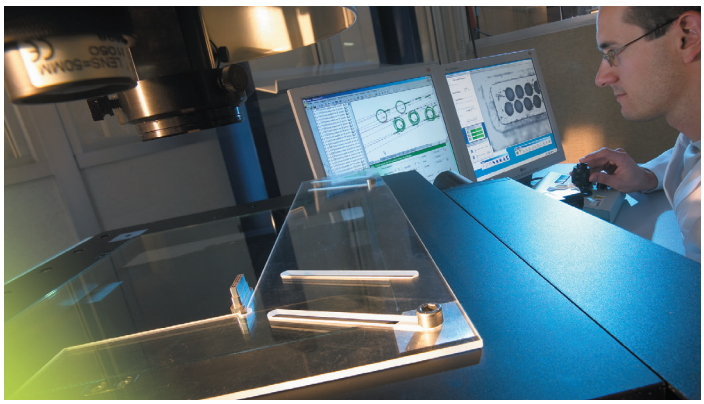

▲ METROLOGY LABORATORY



▲ WEIGHT & SPACE SAVING

D-Click® connectors

Applications:

- Space: Mega-constellations, satellites, launchers,
- Avionics,
- Defense,
- Research centres,
- Industry,
- Medical,
- Automotive.

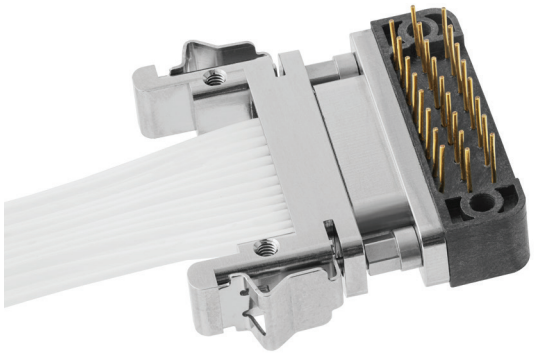

MORE FAST-LOCKING CONNECTORS

In addition to D-Click® Micro-D connectors, Axon' offers **D-ClickLite®**, a range of **composite** connectors with a fast-locking system. These connectors are a cost-effective solution based on the Twist-Pin technology. They allow for quick and secure demating.

SnapLite® is a range of composite fast-locking connectors, available in 2 or 4 ways. Originally developed for splicing for space equipment, they can be used for any application requiring secure locking in a space-constrained area.

Versatys® connectors are **compact power connectors** which give greater flexibility to customers in terms of design. Removable contacts and fast-locking connector versions make integration with customer equipment easier and faster. No need to change all the connector if only one line is damaged. Just one click is needed to mate miniature power connectors equipped with the **D-Click® fast-latching system**.



QUALITY ASSURANCE

ISO 9001 | **EN/ISO 9100** | **ISO 14001** | **ISO 45001**

©2018, AXON'CABLE - RELEASED SEPTEMBER 2025/C - www.axon-cable.com

GLOSSARY OF TERMS

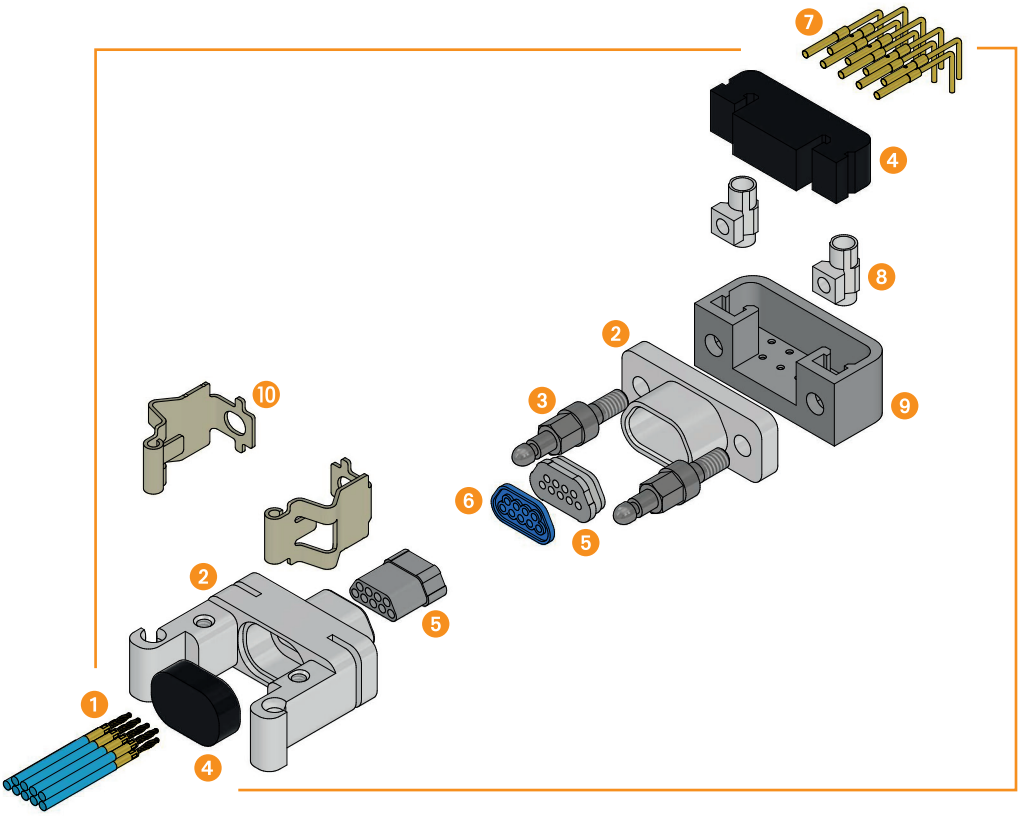

TWIST PIN	1	Male contact, fitted to plug connector.
SHELL	2	Connector metal body.
D-CLICK® LATCH-POST	3	Mates with latch spring.
POTTING	4	Epoxy compound used as an encapsulant.
INSERT	5	Moulded insulation housing, separating each connection.
INTERFACIAL SEAL	6	Fitted to socket connector only.
SOCKET	7	Female contact, fitted to socket connector (also known as socket).
THREADED INSERT (2-56 UNC 2A)	8	Used to screw the connector onto the PCB.
TRAY	9	Junction box used for PCB connectors only.
D-CLICK® LATCH SPRING	10	Latches onto the D-Click® latch-post.

- PCB connector: Connector with footprint for printed circuit board.
- CBR connector: Condensed Board Right Angle connector.
- BS connector: Board Straight connector.
- Pigtail connector: Connector with insulated or uninsulated wires.
- D-Click® connector: Connector designed for D-Click® hardware.
- D-Click® hardware: Mechanical hardware allowing quick mating & demating even without tools.

CONNECTORS ARE SUPPLIED WITH ANTI-STATIC PROTECTIVE DUST CAPS

©2018, AXON'CABLE - RELEASED SEPTEMBER 2025/C - www.axon-cable.com

D-CLICK® CONNECTOR WEIGHTS

D-CLICK® CONNECTOR WEIGHTS IN GRAMS							
NB OF CONTACT	GENDER	PIGTAIL DC HARDWARE (LATCH-CLIPS)	PIGTAIL G HARWARE (LATCH-POSTS)	PCB CBR .100" pitch	PCB CBR .075" pitch	PCB BS .100" pitch	PCB BS .075" pitch
9	MALE	4.1	3.0	4.2	4.2	4.8	4.5
	FEMALE	4.0	3.0	4.2	4.1	4.8	4.5
15	MALE	4.6	3.5	5.0	5.0	5.4	5.3
	FEMALE	4.5	3.4	4.9	4.9	5.3	5.2
21	MALE	5.1	4.0	5.8	5.6	6.5	6.0
	FEMALE	5.0	3.9	5.7	5.5	6.4	5.9
25	MALE	5.5	4.3	6.2	6.1	6.9	6.4
	FEMALE	5.3	4.1	6.1	6.0	6.8	6.3
31	MALE	6.0	4.7	7.7	6.9	8.0	7.2
	FEMALE	5.7	4.6	7.5	6.7	7.8	7.0
37	MALE	6.5	5.3	8.7	7.8	9.2	8.0
	FEMALE	6.2	5.1	8.4	7.5	8.9	7.7
51	MALE	7.4	6.0	11.0	9.6	10.0	8.7
	FEMALE	7.0	5.8	10.7	9.3	9.7	8.4

NOTES
NOMINAL WEIGHT SHOWN. ADD 10% FOR MAXIMUM WEIGHT.
CONNECTOR WEIGHT INCLUDES HARDWARE.
PIGTAILS: SEE TABLE PAGE 76 & 77 FOR WIRE WEIGHT CALCULATION.

CONTACT ARRANGEMENTS

Mating face of male rectangular connector

- 1.27 mm (.050") contact spacing.
- 1.09 mm (.043") spacing between rows.

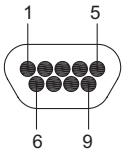

9 CONTACTS

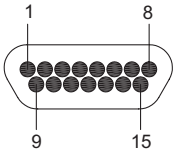

15 CONTACTS

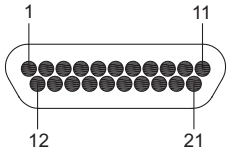

21 CONTACTS

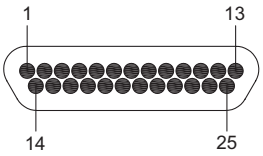

25 CONTACTS

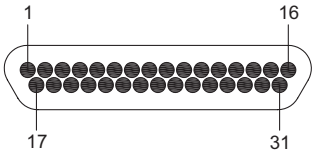

31 CONTACTS

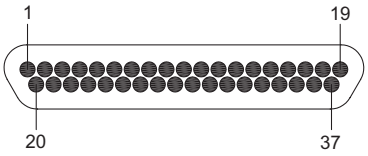

37 CONTACTS

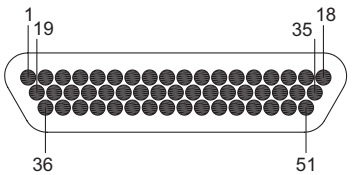

51 CONTACTS

©2018, AXON'CABLE - RELEASED SEPTEMBER 2025/C - www.axon-cable.com

CONTACT ARRANGEMENTS

Mating face of female rectangular connector

- 1.27 mm (.050") contact spacing.
- 1.09 mm (.043") spacing between rows.

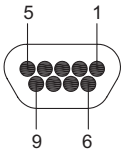

9 CONTACTS

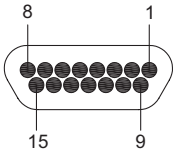

15 CONTACTS

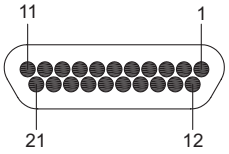

21 CONTACTS

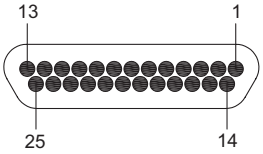

25 CONTACTS

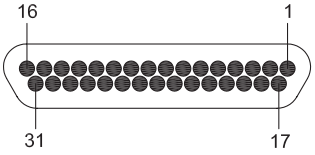

31 CONTACTS

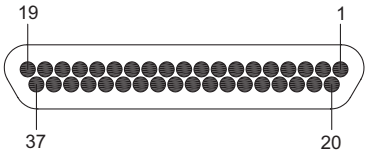

37 CONTACTS

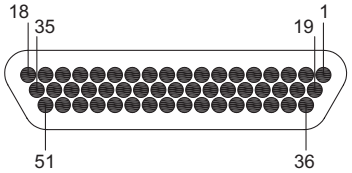

51 CONTACTS

D-CLICK®
FAST-LATCHING SYSTEM

How it works

MATING		DE-MATING
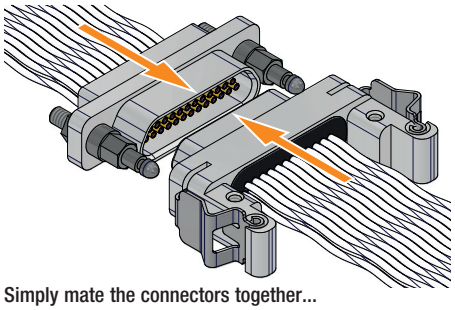 Simply mate the connectors together...	STEP 1	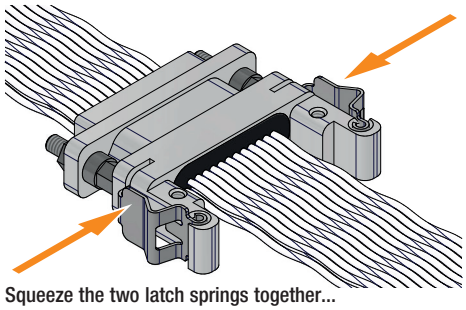 Squeeze the two latch springs together...
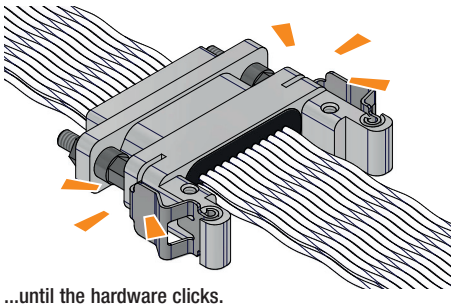 ...until the hardware clicks.	STEP 2	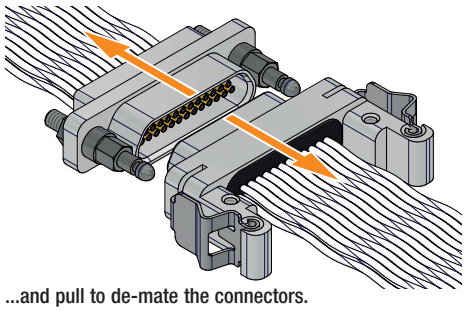 ...and pull to de-mate the connectors.

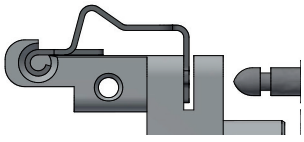

Align the connectors face to face and push together

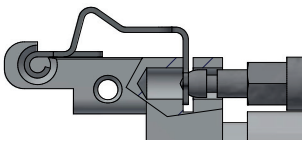

The head of the latch-post enters and starts to dis-place the latch spring until...

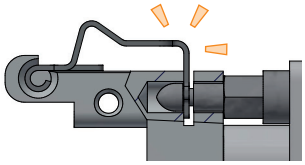

... it clicks audibly into place: the hardware is correctly locked.

©2018, AXON'CABLE - RELEASED SEPTEMBER 2025/C - www.axon-cable.com

PANEL MOUNTING GUIDE

Latch-posts are always supplied with the connector. Choose it with the hardware code (G / Gx / Hx / P / Px / Wx) of the identification code of the connector.

See page 16 for hardware information.

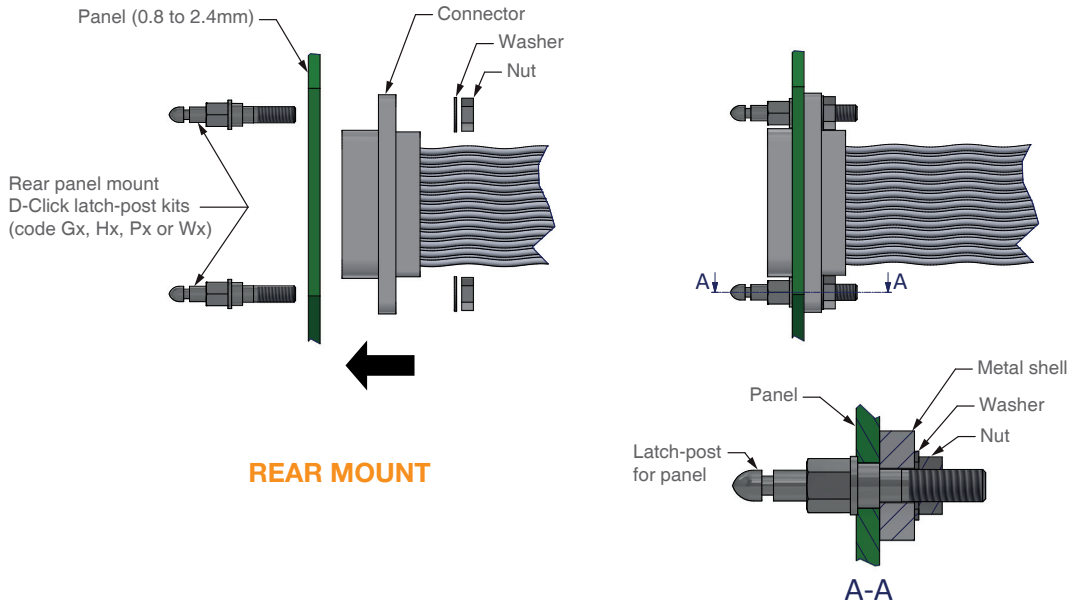

REAR MOUNT

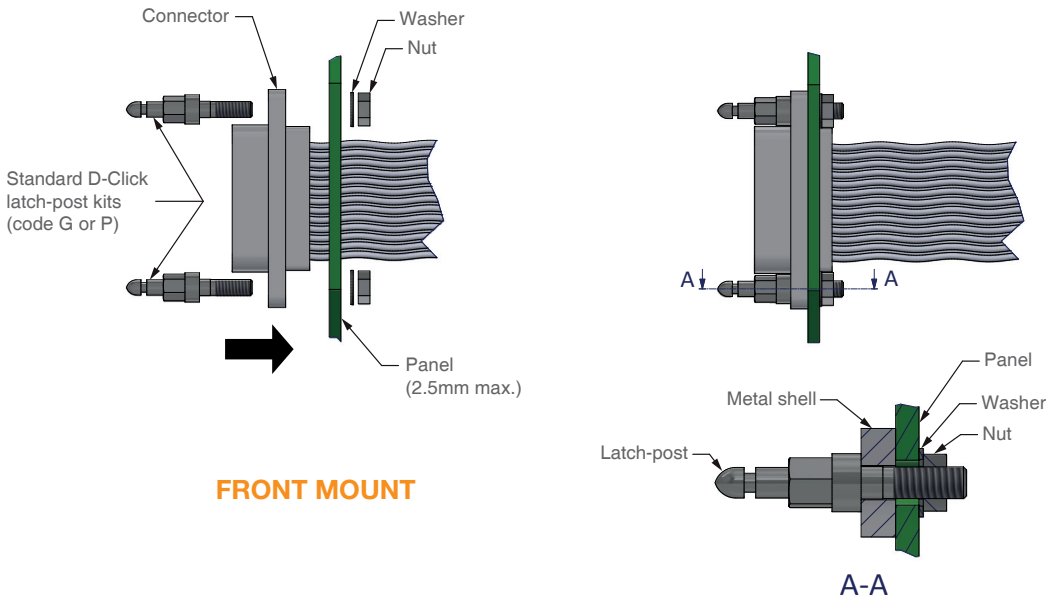

FRONT MOUNT

PANEL CUTOUTS

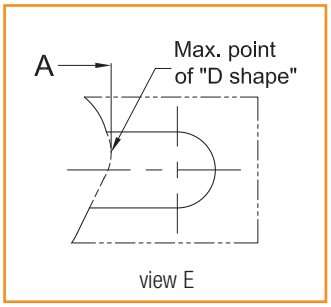

Metal shell

9 TO 51 CONTACTS

FIGURE 1
FRONT MOUNT

FIGURE 2
REAR MOUNT

Dimensions are in millimetres (inches).

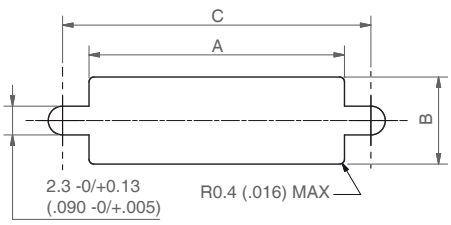

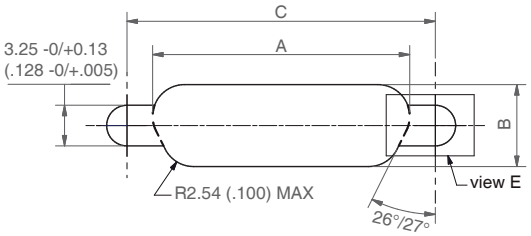

Dimensions

Dimensions are in millimetres (inches).

LAYOUT	FIGURE N°	A -0/ +0.1 (-0 /+.004)	B -0/ +0.1 (-0 /+.004)	C -0/ +0.13 (-0 /+.005)
9	1	10.26 (.404)	6.96 (.274)	14.48 (.570)
	2	10.36 (.408)	6.55 (.258)	14.48 (.570)
15	1	14.07 (.554)	6.96 (.274)	18.29 (.720)
	2	14.20 (.559)	6.55 (.258)	18.29 (.720)
21	1	17.88 (.704)	6.96 (.274)	22.10 (.870)
	2	18.00 (.709)	6.55 (.258)	22.10 (.870)
25	1	20.42 (.804)	6.96 (.274)	24.64 (.970)
	2	20.55 (.809)	6.55 (.258)	24.64 (.970)
31	1	24.23 (.954)	6.96 (.274)	28.45 (1.120)
	2	24.36 (.959)	6.55 (.258)	28.45 (1.120)
37	1	28.04 (1.104)	6.96 (.274)	32.26 (1.270)
	2	28.17 (1.109)	6.55 (.258)	32.26 (1.270)
51	1	26.77 (1.054)	8.00 (.315)	31.00 (1.220)
	2	26.90 (1.059)	7.64 (.301)	31.00 (1.220)

©2018, AXON'CABLE - RELEASED SEPTEMBER 2025/C - www.axon-cable.com

Minimum spacing between D-Click® connectors

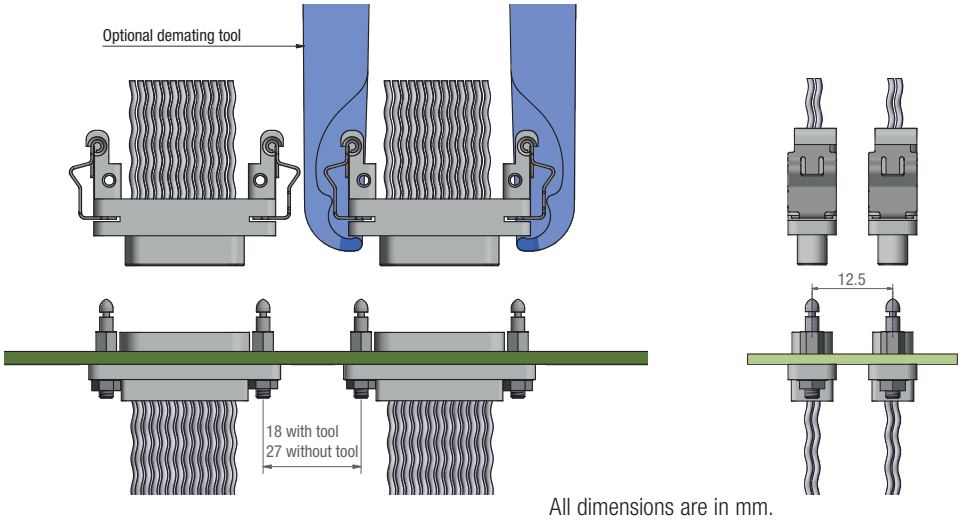

All dimensions are in mm.

With a dedicated tool: 18.00 mm between nearest hardware hole centres.
Without tool: 27.00 mm between nearest hardware hole centres.

AXON' has designed a specific de-mating tool, to help squeeze the 2 latch springs together and remove the connector where there is limited space. The use of this tool makes it possible to install connectors closer to each other. Please contact AXON' for this tooling information.

D-CLICK® HARDWARE

Hardware for rear panel mount connectors

- 3 versions of rear panel mount latch-posts: - 1 version for pigtails connectors,
  - 2 versions for PCB connectors.
- 1 kit consists of : - 2 latch-posts, 2 washers and 2 nuts for pigtail connectors,
  - 2 latch-posts for PCB connectors.
- Material: passivated 300 series stainless steel.

Dimensions are given in millimetres (inches).

HARDWARE CODE	Pigtails	G1/P1	G2/P2	G3/P3	G4/P4	G5/P5
	PCB (without threaded inserts)	G1/P1	G2/P2	G3/P3	G4/P4	G5/P5
	PCB (with threaded insert)	H1/W1	H2/W2	H3/W3	H4/W4	H5/W5
PANEL THICKNESS -0.0 /+0.2 (-.000 /+.008)	mm	0.8	1.2	1.6	2	2.4
	inch	.031	.047	.062	.079	.094
DIM. A ±0.05 (±.002)	mm	0.7	1.1	1.5	1.9	2.3
	inch	.028	.043	.059	.075	.091

PIGTAILS (02, 07 & 09)*

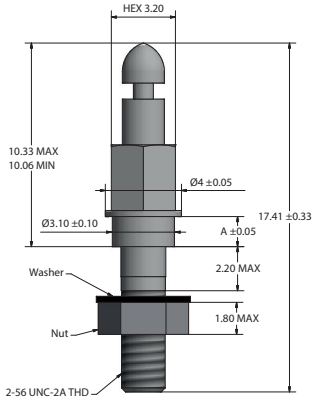

BS (04), & 75SA/75SB (05) PCB*

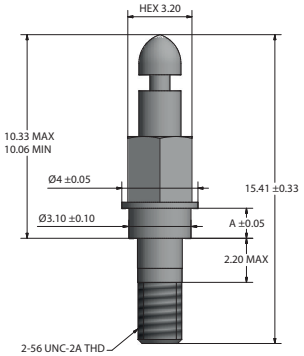

CHR PCB

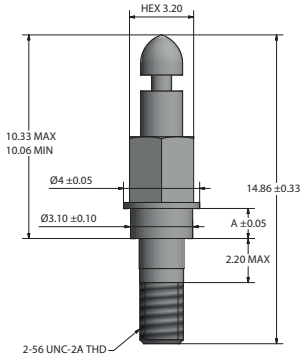

CBR (03) & 75RC/75RB (06) PCB*

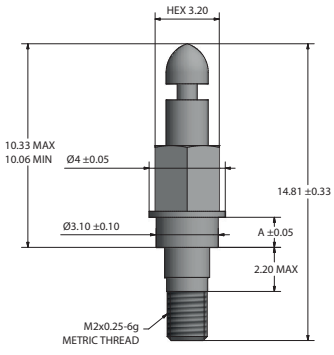

*: The figures in brackets indicate which ESCC D-Click® variants are compatible.
RECOMMENDED TORQUE: 0.39 N.m / 3.45 inch-pounds

©2018, AXON'CABLE - RELEASED SEPTEMBER 2025/C - www.axon-cable.com

D-CLICK® HARDWARE

PCB connector mounting instructions

Axon' offers two different ways to mount your connectors to your PCB.

PCB CONNECTORS WITH NO THREADED INSERTS

The first method relies on a Ø2.44 through hole in the connector tray. The mounting of the connector to the PCB is made with a Screw/washers/nut assembly. The screw and nut can be either top- or bottom-mounted.

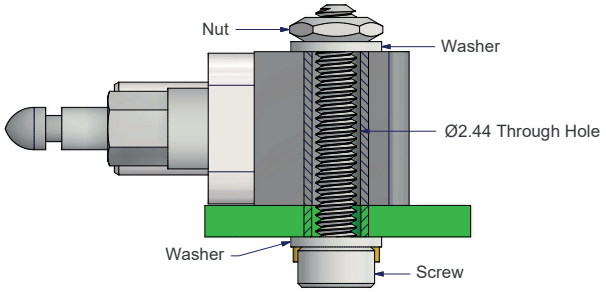

PCB CONNECTORS WITH THREADED INSERTS INSTALLED

The second method uses metal threaded holes in the connector tray. With this method a bottom-mounted screw alone is required with a recommended torque value of 0.14 N.m.

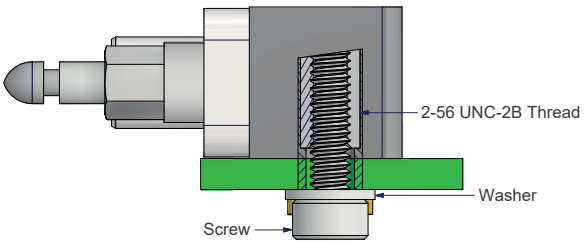

DC TABS

You asked - we listened!

To better serve its customers, Axon' has developed an accessory called **DC Tabs**, designed to provide a visual aid for users who need it.

The D-Click® connectors give an audible click to confirm proper connection. For users who prefer an additional visual confirmation, optional DC Tabs, made from composite materials, can be added for extra functionality:

- **Visual inspection**: The DC Tabs only fit correctly under the D-Click® springs when the connection is properly made. A loose tab indicates an improper connection.
- **Prevent accidental disconnection**: When the DC Tab is locked in place, the springs cannot be compressed accidentally, making disconnection impossible.
- **No risk of loss**: Integrated as part of the D-Click® system, the DC Tabs stay secure and won't create any Foreign Object Debris (FOD).

Visual inspection criteria

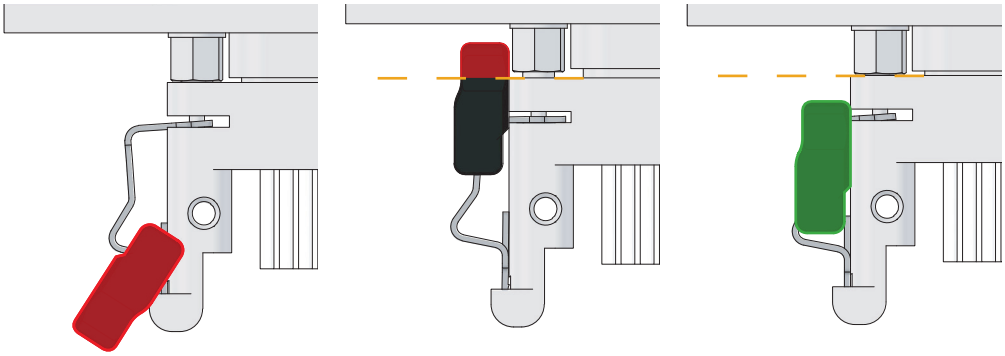

NOT LOCKED	POORLY LOCKED	CORRECTLY LOCKED
The DC Tab is in the pending position.	The DC Tab can't be fully locked. The connector isn't properly mated. The tab isn't positioned behind the front flange when blocked.	The DC Tab is in the locked position. The connector is properly mated. It cannot be disconnected unless the DC Tab is returned to the pending position. The tab is securely behind the front flange when blocked.

How to lock DC Tabs



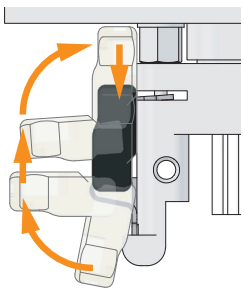

- Rotate the DC Tab from pending position until it is perpendicular to the connector's side.
- Slide it to the front of the connector.
- Fold the DC Tab forward, towards the connector.
- Pull the DC Tab back to lock it in place.

©2018, AXON'CABLE - RELEASED SEPTEMBER 2025/C - www.axon-cable.com

AXON' CABLE D-Click® connectors

Micro-D D-Click® connectors

General characteristics - 20

Reach & RoHS compliance - 21

Micro-D D-Click® Pigtail connectors - 22

Micro-D D-Click® Solder Cup connectors - 25

Micro-D D-Click® Right Angle PCB connectors - 28

Micro-D D-Click® Straight PCB connectors - 39

One piece design saver - 48

Back-to-back assembly jumper - 49

Custom designed connectors - 51

©2018, AXON'CABLE - RELEASED SEPTEMBER 2025/C - www.axon-cable.com

GENERAL CHARACTERISTICS

per MIL-DTL-83513*

Based on its Micro-D range, AXON's D-Click® connector range is designed for quick mating & de-mating. The innovative latching hardware allows rapid, reliable and secure connections with no tooling required. The Micro-D D-Click® range, which is covered by the MIL-DTL-83513* standard, is ideally suited to equipment and applications where weight, miniaturisation and long term performance are required. It is available in 7 contact arrangements (9 to 51 contacts) for rectangular Micro-D connectors.

Electrical & mechanical characteristics

CHARACTERISTICS	SPECIFICATION	TEST METHOD
CURRENT RATING	3 A max.	EIA-364-70
CONTACT RESISTANCE	8 mΩ @ current rating	EIA-364-06
INSULATION RESISTANCE	5000 MΩ min. @ 500 VDC	EIA-364-21
DIELECTRIC WITHSTANDING VOLTAGE - SEA LEVEL 0 m - ALTITUDE 21 km (70.000 ft)	 600 VAC 150 VAC	EIA-364-20
CONTACT ENGAGING AND SEPARATION FORCE	170 g max. (6 oz) 14 g max. (0.5 oz)	EIA-364-37
CONNECTOR MATING AND DE-MATING FORCE	283 g (10 oz) x number of contacts max.	EIA-364-13
CONTACT RETENTION	2.26 kg (5 lbs) for 5 seconds min.	EIA-364-29
DURABILITY	500 mating cycles min.	EIA-364-09
TEMPERATURE RANGES - STANDARD - HIGH TEMP	 -55°C / +150°C -55°C / +200°C	
VIBRATION	20 g's - no discontinuity >1µs	EIA-364-28 - TEST CONDITION IV
SHOCK	50 g's - no discontinuity >1µs	EIA-364-27 - TEST CONDITION E
SALT SPRAY	48 hours	EIA-364-26 - TEST CONDITION B
HUMIDITY	Insulation resistance > 1MΩ	EIA-364-31 - METHOD IV

Material & Finish

COMPONENT	MATERIAL	FINISH
MALE CONTACT (TWIST PIN)	COPPER AND BERYLLIUM COPPER	GOLD PLATING IN ACCORDANCE WITH ASTM-B488, TYPE II, CLASS 1 (1.27 µm (0.00005") MINI), CODE C OVER NICKEL UNDERPLATE IN ACCORDANCE WITH SAE-AMS-QQ-N-290 CLASS 2 (1.27 µm (0.00005") TO 3.81 µm (0.00015"))
FEMALE CONTACT	COPPER ALLOY	
METAL SHELL	ALUMINIUM ALLOY, TYPE 6061	ELECTROLESS NICKEL PLATING IN ACCORDANCE WITH SAE-AMS2404, CLASS 4, .0005 INCH MIN.
PLASTIC INSERT / PCB TRAY	LIQUID CRYSTAL POLYMER, 30% LOADED GLASS FIBRE POLYESTER, 94VO, IN ACCORDANCE WITH MIL-M-24519 (200°C)	
INTERFACIAL SEAL	FLUOROSILICONE RUBBER	
LATCH-POST / HARDWARE	STAINLESS STEEL, 300 SERIES	PASSIVATION IN ACCORDANCE WITH SAE-AMS-2700
LATCH SPRING	BERYLLIUM COPPER	ELECTROLESS NICKEL PLATING IN ACCORDANCE WITH SAE-AMS2404, CLASS 4, .00015 INCH MIN.
ENCAPSULANT	EPOXY RESIN	
INSULATED WIRE	PTFE INSULATED SILVER PLATED COPPER IN ACCORDANCE WITH NEMA-HP3	
UNINSULATED WIRE	GOLD PLATED SOLID COPPER WIRE IN ACCORDANCE WITH A-A-59551 TIN PLATED SOLID COPPER WIRE IN ACCORDANCE WITH A-A-59551	

*: ISSUE **H** AT TIME OF GOING TO PRESS

©2018, AXON'CABLE - RELEASED SEPTEMBER 2025/C - www.axon-cable.com

REACH & RoHS COMPLIANCE

RoHS compliance

AXON' CABLE has been pro-actively implementing measures for many years to ensure compliance with the European Directive 2011/65/EU which came into force on 21st July 2011. The Directive prohibits the use of Hazardous Substances such as lead, mercury, hexavalent chromium, cadmium, bromine compounds (PBB and PBDE) and various phtalates. It relates to all components of products which are used in the manufacture of electrical and electronic equipment.

As a cable and connector manufacturer, AXON' has taken actions to ensure compliance with directive 2000/53/EC applicable since 21st October 2000.

COMPONENT SPECIFIC RoHS COMPLIANCE

COMPONENT	MATERIAL	FINISH	RoHS STATUS
PIN CONTACT (TWIST PIN)	COPPER + BERYLLIUM COPPER	GOLD	RoHS Compliant
SOCKET CONTACT	COPPER ALLOY	GOLD	RoHS Compliant
METAL SHELL	ALUMINIUM ALLOY TYPE 6061	ELECTROLESS NICKEL	RoHS Compliant
PLASTIC INSERT / PCB TRAY	LIQUID CRYSTAL POLYMER	N/A	RoHS Compliant
INTERFACIAL SEAL	FLUOROSILICONE RUBBER	N/A	RoHS Compliant
LATCH-POST / HARDWARE	STAINLESS STEEL 300 SERIES	PASSIVATION	RoHS Compliant
LATCH SPRING	BERYLLIUM COPPER	ELECTROLESS NICKEL	RoHS Compliant
PCB TERMINATION	SOLID COPPER WIRE	GOLD	RoHS Compliant
	SOLID COPPER WIRE	NOT LEADED TIN 97% MAX TIN	RoHS Compliant
	SOLID COPPER WIRE	37% LEADED	~~RoHS Compliant~~
ENCAPSULANT	EPOXY RESIN 150°C & 200°C VERSIONS	N/A	RoHS Compliant

Application of REACH

The new EU regulation on the Registration, Evaluation, Authorisation and restriction of Chemicals (REACH) came into force in June 2007. The regulation concerns the authorised use of chemicals. It requires manufacturers and importers to register substances and their use with the European Chemical Agency (ECHA).

AXON' CABLE is known as a "*downstream user*" with respect to the REACH regulation, and a manufacturer of "Articles". AXON' CABLE products are not intended to release any undesired substance under normal and reasonable operations of use.

To this day AXON' CABLE have not identified any component containing any SVHC in their product range.

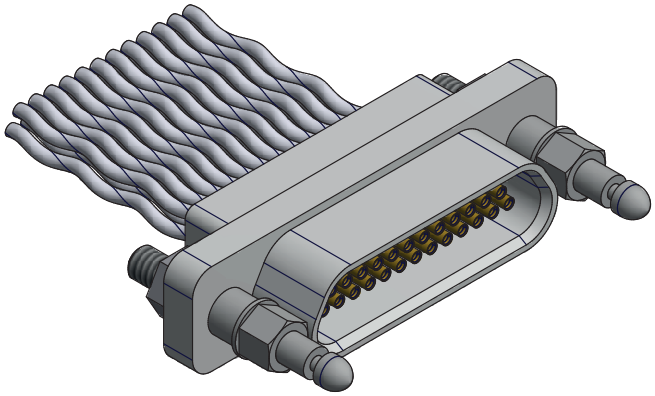

MDDCA 2 25 S 1 L xxx G5

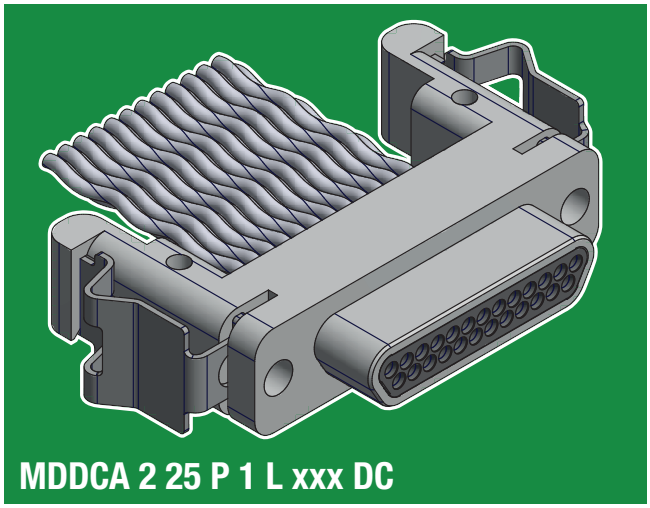

MDDCA 2 25 P 1 L xxx DC

MICRO-D D-CLICK® PIGTAIL CONNECTORS

IDENTIFICATION CODE

MDDCA	1	25	P	1	L	050	DC

SERIES
MDDCA: Micro-D D-Click® AXON' Series.

CONNECTOR TYPE
2: Nickel aluminium shell + potting 150°C.
3: Nickel aluminium shell + potting 200°C.

NUMBER OF CONTACTS
09, **15**, **21**, **25**, **31**, **37**, **51**.

CONNECTOR GENDER
P: Male (pin contact).
S: Female (socket contact).

WIRE TYPE
For colour codes F, L & W

1: E2607, AWG26, 7 strands, 600V.
4: E2619, AMG26, 19 strands, 600V.
6: E2807, AWG28, 7 strands, 600V.
8: E3007, AWG30, 7 strands, 600V.
A: E2407, AWG24, 7 strands, 600V.
C: E2419, AWG24, 19 strands, 600V.

For colour codes V only

F: E2607, AWG26, 7 strands, 600V.

Solid uninsulated wires

G: AWG25 gold plating.
T: AWG24 tin plating.

See page 76 for wire types.

L	5 ≤ L ≤ 10	10 < L ≤ 100	L >100
in cm (inches)	1.97 ≤ L ≤ 3.940	3.940 < L ≤ 39.40	L > 39.40
TOLERANCE	-0 / +0.5	-0 / +3	-0 / +5
in cm (inches)	-0 / +0.200	-0 / +1.180	-0 / +1.970

COLOUR CODE
F: All yellow.
L: All white.
BLANK: If wire type is G or T.
W: 10 colour repeat.
V: MIL-STD-681 (only for wire type F).

See page 78 for colour codes.

WIRE LENGTH (cm)
Wire length in centimeters (1 cm = 10 mm = 0.394").

HARDWARE
DC: D-Click® latch springs.
G: D-Click® latch-posts.
Gx (x: 1 to 5): D-Click® latch-posts, rear panel mount.

See page 16 for D-Click® hardware.

DC TABS
Visual inspection & locking accessory.
Replace hardware code **DC** with **DCS** for DC Tabs equipped connectors.
See page 18 for more details.

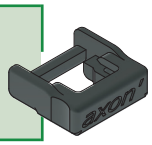

CONNECTORS ARE SUPPLIED WITH ANTI-STATIC PROTECTIVE DUST CAPS

©2018, AXON'CABLE - RELEASED SEPTEMBER 2025/C - www.axon-cable.com

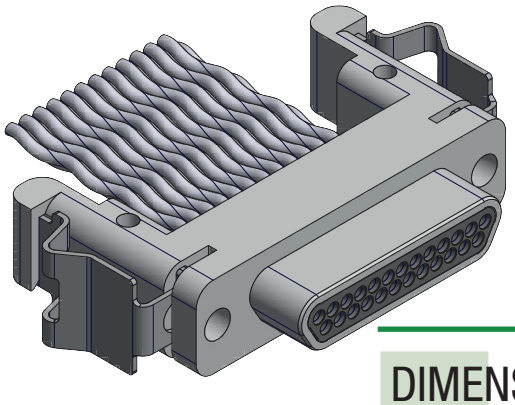

PIGTAIL
WITH LATCH SPRINGS

DIMENSIONS

Dimensions are in millimetres (inches).

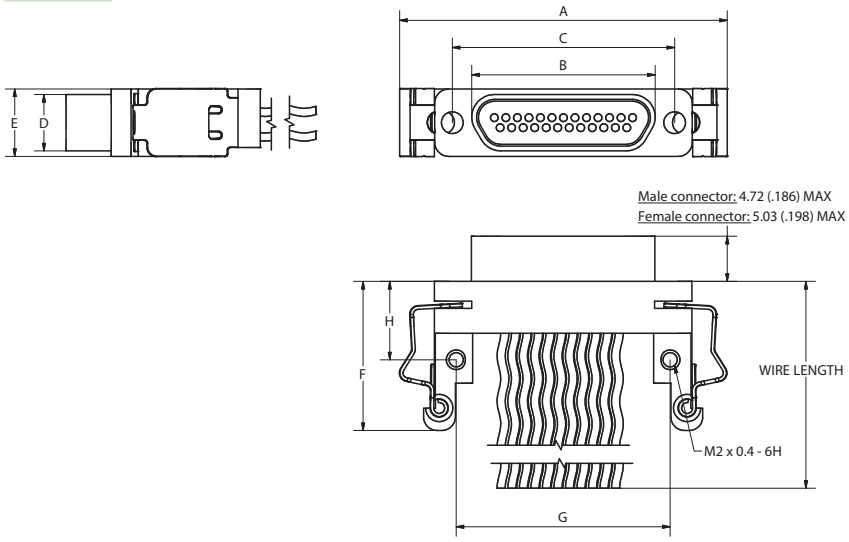

	A max.	B max.		C ± 0.13 (±.005)	D max.		E max.	F max.	G ± 0.13 (±.005)	H ± 0.13 (±.005)
		Male	Female		Male	Female				
9 P / 9 S	26.34 1.037	8.48 .334	10.16 .400	14.35 .565	4.69 .185	6.35 .250	7.82 .308	16.73 .569	13.43 .529	8.67 .341
15 P / 15 S	30.15 1.187	12.29 .484	14.00 .551	18.16 .715	4.69 .185	6.35 .250	7.82 .308	16.73 .569	17.24 .679	8.67 .341
21 P / 21 S	33.96 1.337	16.10 .634	17.81 .701	21.97 .865	4.69 .185	6.35 .250	7.82 .308	16.73 .569	21.05 .829	8.67 .341
25 P / 25 S	36.50 1.437	18.64 .734	20.35 .801	24.51 .965	4.69 .185	6.35 .250	7.82 .308	16.73 .569	23.59 .929	8.67 .341
31 P / 31 S	40.27 1.585	22.45 .884	24.16 .951	28.32 1.115	4.69 .185	6.35 .250	7.82 .308	16.73 .569	27.36 1.077	8.67 .341
37 P / 37 S	44.12 1.737	26.26 1.034	27.96 1.101	32.13 1.265	4.69 .185	6.35 .250	7.82 .308	16.73 .569	31.21 1.229	8.67 .341
51 P / 51 S	42.85 1.687	24.99 .984	26.70 1.051	30.86 1.215	5.79 .228	7.44 .293	8.91 .351	16.73 .569	29.94 1.179	8.67 .341

SUMMARY OF CHARACTERISTICS

ELECTRICAL & MECHANICAL PERFORMANCE	
CURRENT RATING	3 A max.
CONTACT RESISTANCE	8 mΩ max.
INSULATION RESISTANCE	5000 MΩ min. @ 500 VDC
DIELECTRIC WITHSTANDING VOLTAGE	Sea level: 600 VDC
	Altitude 21 km: 150 VDC
CONTACT ENGAGING FORCE	170 g max.
CONTACT SEPARATING FORCE	14 g min.
CONTACT RETENTION	2.26 kg (5 lbs)
DURABILITY	500 mating cycles min.
VIBRATION	20g's – No discontinuity > 1 µs
SHOCK	50g's – No discontinuity > 1 µs

MATERIAL & FINISH	
SHELL	Aluminium alloy 6061 with electroless nickel
MOULDED INSULATOR	Liquid Crystal Polymer (LCP)
INTERFACIAL SEAL	Fluorosilicone rubber
PIN CONTACT	Copper and beryllium copper, gold over nickel plating
SOCKET CONTACT	Copper alloy, gold over nickel plating
ENCAPSULANT	Epoxy resin
LATCH SPRINGS	Beryllium copper with nickel plating

©2018, AXON'CABLE - RELEASED SEPTEMBER 2025/C - www.axon-cable.com

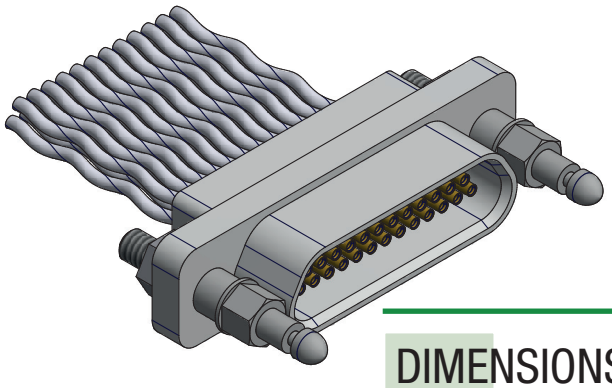

PIGTAIL
WITH LATCH-POSTS

DIMENSIONS

Dimensions are in millimetres (inches).

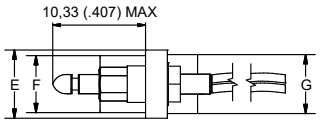

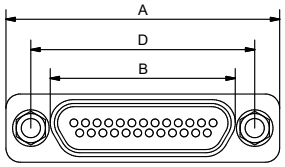

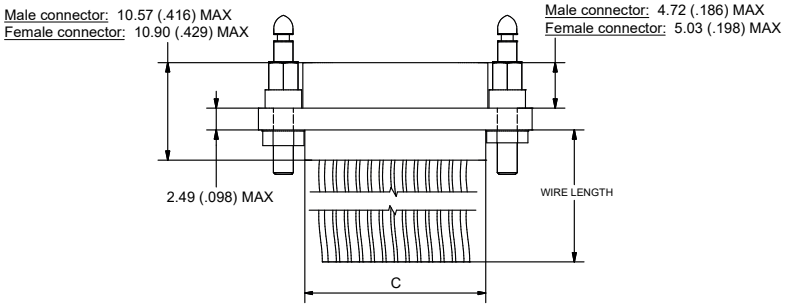

	A ± 0.25 (±.010)	B max.		C -0.46/+0.25 (-.018/+.010)	D ± 0.13 (±.005)	E ± 0.25 (±.010)	F max.		G max.
		Male	Female				Male	Female	
9 P / 9 S	19.69 .775	8.48 .334	10.16 .400	9.91 .390	14.35 .565	7.57 .298	4.69 .185	6.35 .250	6.86 .270
15 P / 15 S	23.50 .925	12.29 .484	14.00 .551	13.72 .540	18.16 .715	7.57 .298	4.69 .185	6.35 .250	6.86 .270
21 P / 21 S	27.31 1.075	16.10 .634	17.81 .701	17.53 .690	21.97 .865	7.57 .298	4.69 .185	6.35 .250	6.86 .270
25 P / 25 S	29.85 1.175	18.64 .734	20.35 .801	20.07 .790	24.51 .965	7.57 .298	4.69 .185	6.35 .250	6.86 .270
31 P / 31 S	33.66 1.325	22.45 .884	24.16 .951	23.88 .940	28.32 1.115	7.57 .298	4.69 .185	6.35 .250	6.86 .270
37 P / 37 S	37.47 1.475	26.26 1.034	27.96 1.101	27.69 1.090	32.13 1.265	7.57 .298	4.69 .185	6.35 .250	6.86 .270
51 P / 51 S	36.20 1.425	24.99 .984	26.70 1.051	26.42 1.040	30.86 1.215	8.66 .341	5.79 .228	7.44 .293	7.87 .310

SUMMARY OF CHARACTERISTICS

ELECTRICAL & MECHANICAL PERFORMANCE	
CURRENT RATING	3 A max.
CONTACT RESISTANCE	8 mΩ max.
INSULATION RESISTANCE	5000 MΩ min. @ 500 VDC
DIELECTRIC WITHSTANDING VOLTAGE	Sea level: 600 VDC
	Altitude 21 km: 150 VDC
CONTACT ENGAGING FORCE	170 g max.
CONTACT SEPARATING FORCE	14 g min.
CONTACT RETENTION	2.26 kg (5 lbs)
DURABILITY	500 mating cycles min.
VIBRATION	20g's – No discontinuity > 1 µs
SHOCK	50g's – No discontinuity > 1 µs

MATERIAL & FINISH	
SHELL	Aluminium alloy 6061 with electroless nickel
MOULDED INSULATOR	Liquid Crystal Polymer (LCP)
INTERFACIAL SEAL	Fluorosilicone rubber
PIN CONTACT	Copper and beryllium copper, gold over nickel plating
SOCKET CONTACT	Copper alloy, gold over nickel plating
ENCAPSULANT	Epoxy resin
LATCH-POSTS / HARDWARE	300 series stainless steel, passivated

©2018, AXON'CABLE - RELEASED SEPTEMBER 2025/C - www.axon-cable.com

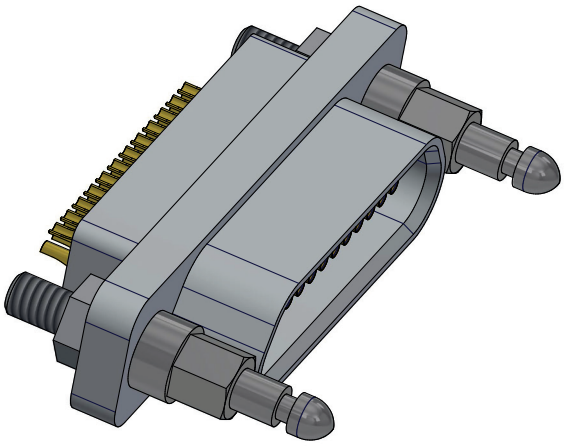

MDDCA 2 25 S FS G

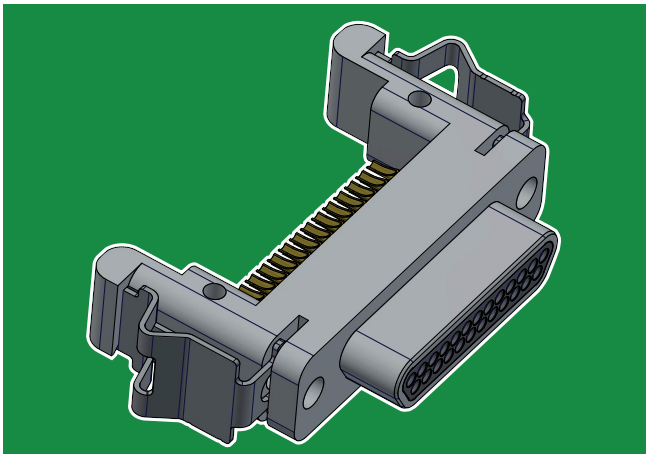

MDDCA 2 25 P FS DC

MICRO-D D-CLICK® SOLDER CUP

IDENTIFICATION CODE

MDDCA	2	25	P	FS	DC

SERIES
MDDCA: Micro-D D-Click® AXON' Series.

CONNECTOR TYPE
2: Nickel aluminium shell + potting 150°C.
3: Nickel aluminium shell + potting 200°C.

NUMBER OF CONTACTS
09, **15**, **21**, **25**, **31**, **37**, **51**.

CONNECTOR GENDER
P: Male (pin contact).
S: Female (socket contact).

SOLDER CUP

HARDWARE
DC: D-Click® latch springs.
G: D-Click® latch-posts.
Gx (x: 1 to 5): D-Click® latch-posts, rear panel mount.
See page 16 for D-Click® hardware.

DC TABS
Visual inspection & locking accessory.
Replace hardware code **DC** with **DCS** for DC Tabs equipped connectors.
See page 18 for more details.

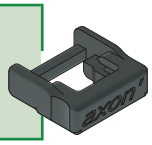

©2018, AXON'CABLE - RELEASED SEPTEMBER 2025/C - www.axon-cable.com

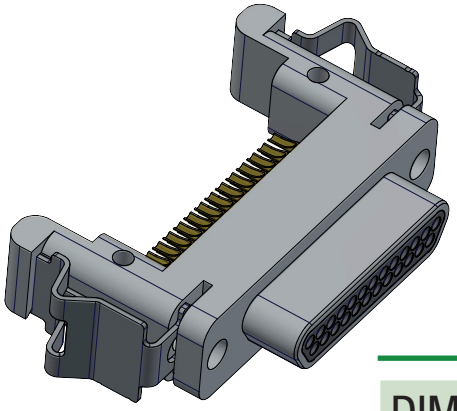

SOLDER CUP
WITH LATCH-SPRINGS

DIMENSIONS

Dimensions are in millimetres (inches).

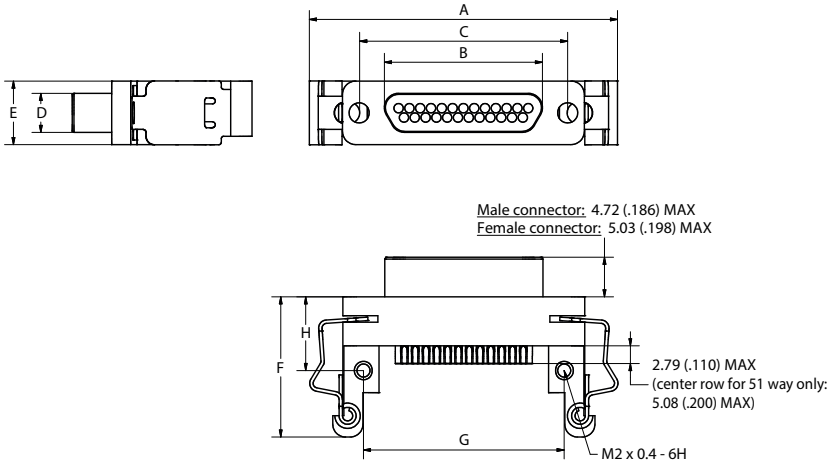

	A max.	B max.		C ± 0.13 (±.005)	D max.		E max.	F max.	G ± 0.13 (±.005)	H ± 0.13 (±.005)
		Male	Female		Male	Female				
9 P / 9 S	26.34 1.037	8.48 .334	10.16 .400	14.35 .565	4.69 .185	6.35 .250	7.82 .308	16.73 .569	13.43 .529	8.67 .341
15 P / 15 S	30.15 1.187	12.29 .484	14.00 .551	18.16 .715	4.69 .185	6.35 .250	7.82 .308	16.73 .569	17.24 .679	8.67 .341
21 P / 21 S	33.96 1.337	16.10 .634	17.81 .701	21.97 .865	4.69 .185	6.35 .250	7.82 .308	16.73 .569	21.05 .829	8.67 .341
25 P / 25 S	36.50 1.437	18.64 .734	20.35 .801	24.51 .965	4.69 .185	6.35 .250	7.82 .308	16.73 .569	23.59 .929	8.67 .341
31 P / 31 S	40.27 1.585	22.45 .884	24.16 .951	28.32 1.115	4.69 .185	6.35 .250	7.82 .308	16.73 .569	27.36 1.077	8.67 .341
37 P / 37 S	44.12 1.737	26.26 1.034	27.96 1.101	32.13 1.265	4.69 .185	6.35 .250	7.82 .308	16.73 .569	31.21 1.229	8.67 .341
51 P / 51 S	42.85 1.687	24.99 .984	26.70 1.051	30.86 1.215	5.79 .228	7.44 .293	8.91 .351	16.73 .569	29.94 1.179	8.67 .341

SUMMARY OF CHARACTERISTICS

ELECTRICAL & MECHANICAL PERFORMANCE	
CURRENT RATING	3 A max.
CONTACT RESISTANCE	8 mΩ max.
INSULATION RESISTANCE	5000 MΩ min. @ 500 VDC
DIELECTRIC WITHSTANDING VOLTAGE	Sea level: 600 VDC
	Altitude 21 km: 150 VDC
CONTACT ENGAGING FORCE	170 g max.
CONTACT SEPARATING FORCE	14 g min.
CONTACT RETENTION	2.26 kg (5 lbs)
DURABILITY	500 mating cycles min.
VIBRATION	20g's – No discontinuity > 1 µs
SHOCK	50g's – No discontinuity > 1 µs

MATERIAL & FINISH	
SHELL	Aluminium alloy 6061 with electroless nickel
MOULDED INSULATOR	Liquid Crystal Polymer (LCP)
INTERFACIAL SEAL	Fluorosilicone rubber
PIN CONTACT	Copper and beryllium copper, gold over nickel plating
SOCKET CONTACT	Copper alloy, gold over nickel plating
SOLDER CUP	Copper alloy, gold over nickel plating
ENCAPSULANT	Epoxy resin
LATCH SPRINGS	Beryllium copper with nickel plating

©2018, AXON'CABLE - RELEASED SEPTEMBER 2025/C - www.axon-cable.com

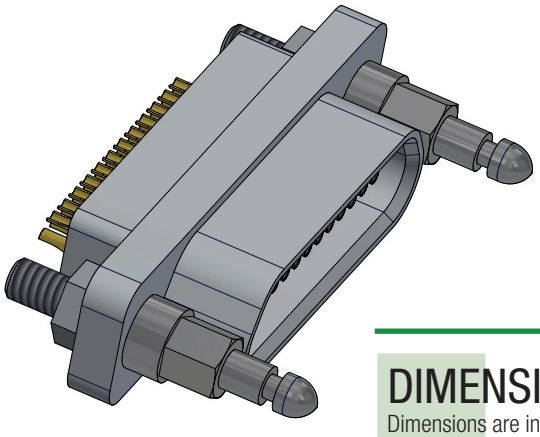

SOLDER CUP
WITH LATCH-POSTS

DIMENSIONS

Dimensions are in millimetres (inches).

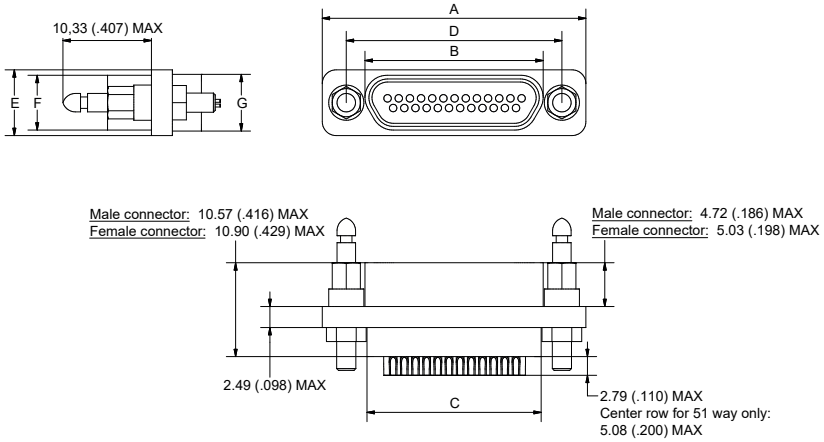

	A ± 0.25 (±.010)	B max.		C -0.46/+0.25 (-.018/+.010)	D ± 0.13 (±.005)	E ± 0.25 (±.010)	F max.		G max.
		Male	Female				Male	Female	
9 P / 9 S	19.69 .775	8.48 .334	10.16 .400	9.91 .390	14.35 .565	7.57 .298	4.69 .185	6.35 .250	6.86 .270
15 P / 15 S	23.50 .925	12.29 .484	14.00 .551	13.72 .540	18.16 .715	7.57 .298	4.69 .185	6.35 .250	6.86 .270
21 P / 21 S	27.31 1.075	16.10 .634	17.81 .701	17.53 .690	21.97 .865	7.57 .298	4.69 .185	6.35 .250	6.86 .270
25 P / 25 S	29.85 1.175	18.64 .734	20.35 .801	20.07 .790	24.51 .965	7.57 .298	4.69 .185	6.35 .250	6.86 .270
31 P / 31 S	33.66 1.325	22.45 .884	24.16 .951	23.88 .940	28.32 1.115	7.57 .298	4.69 .185	6.35 .250	6.86 .270
37 P / 37 S	37.47 1.475	26.26 1.034	27.96 1.101	27.69 1.090	32.13 1.265	7.57 .298	4.69 .185	6.35 .250	6.86 .270
51 P / 51 S	36.20 1.425	24.99 .984	26.70 1.051	26.42 1.040	30.86 1.215	8.66 .341	5.79 .228	7.44 .293	7.87 .310

SUMMARY OF CHARACTERISTICS

ELECTRICAL & MECHANICAL PERFORMANCE	
CURRENT RATING	3 A max.
CONTACT RESISTANCE	8 mΩ max.
INSULATION RESISTANCE	5000 MΩ min. @ 500 VDC
DIELECTRIC WITHSTANDING VOLTAGE	Sea level: 600 VDC
	Altitude 21 km: 150 VDC
CONTACT ENGAGING FORCE	170 g max.
CONTACT SEPARATING FORCE	14 g min.
CONTACT RETENTION	2.26 kg (5 lbs)
DURABILITY	500 mating cycles min.
VIBRATION	20g's – No discontinuity > 1 µs
SHOCK	50g's – No discontinuity > 1 µs

MATERIAL & FINISH	
SHELL	Aluminium alloy 6061 with electroless nickel
MOULDED INSULATOR	Liquid Crystal Polymer (LCP)
INTERFACIAL SEAL	Fluorosilicone rubber
PIN CONTACT	Copper and beryllium copper, gold over nickel plating
SOCKET CONTACT	Copper alloy, gold over nickel plating
SOLDER CUP	Copper alloy, gold over nickel plating
ENCAPSULANT	Epoxy resin
LATCH-POSTS / HARDWARE	300 series stainless steel, passivated

©2018, AXON'CABLE - RELEASED SEPTEMBER 2025/C - www.axon-cable.com

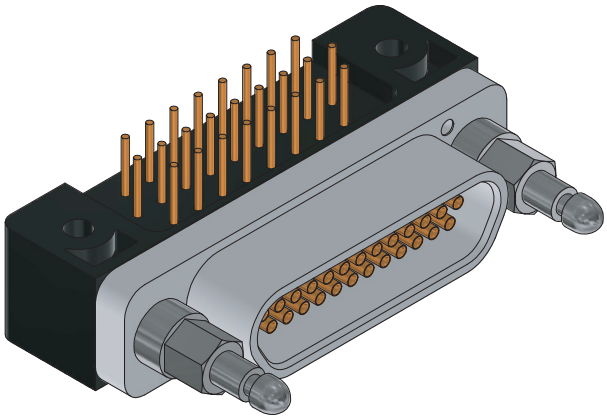

MDDCA 2 25 S 75RB H G 2

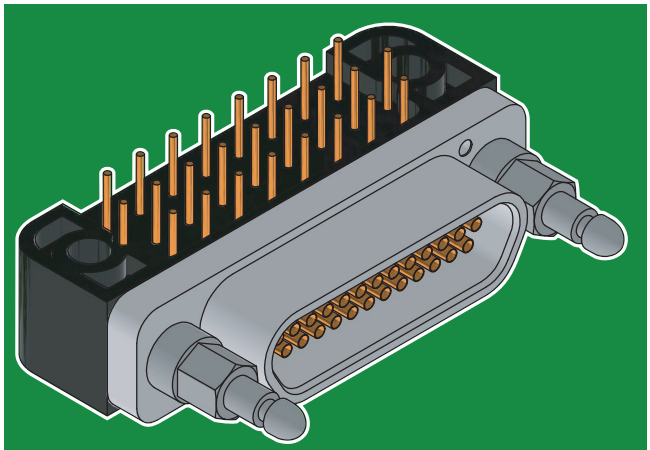

MDDCA 2 25 S CBR G G 2

MICRO-D D-CLICK® RIGHT ANGLE PCB CONNECTORS

IDENTIFICATION CODE

MDDCA	2	25	S	CBR	G	G	2

SERIES

MDDCA: Micro-D D-Click® AXON' series.

CONNECTOR TYPE

2: Nickel aluminium shell + potting 150°C.
3: Nickel aluminium shell + potting 200°C.

NUMBER OF CONTACTS

09, **15**, **21**, **25**, **31**, **37**, **51**.

CONNECTOR GENDER

P: Male (pin contacts).
S: Female (socket contacts).

PCB VERSION

75RB: 0.075" Condensed Board Right Angle.
75RC: 0.075" Condensed Board Right Angle based on BS MIL Standard Layout.
CBR: 0.100" Condensed Board Right Angle.
CHR: 0.100" Condensed High Clearance Right Angle.

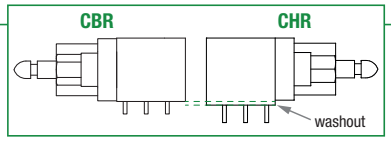

HARDWARE

G: D-Click® latch-posts, no threaded inserts.
H: D-Click® latch-posts & threaded inserts installed.
Gx (x: 1 to 5): D-Click® latch-posts, rear panel mount, no threaded inserts.
Hx (x: 1 to 5): D-Click® latch-posts, rear panel mount and threaded inserts installed.
***x= 1**: 0.8 mm thickness* ***2**: 1.2 mm thickness* ***3**: 1.6 mm thickness*
***4**: 2.0 mm thickness* ***5**: 2.4 mm thickness*
See page 16 & 17 for D-Click® hardware.

CONDUCTOR TYPE

G: Gold plated solid conductor AWG 25.
T: Tin plated solid conductor AWG 24.
D: Flash gold plated solid conductor AWG 25.
X: Gold plated copper dipped in tin-lead AWG 24.
U: Gold plated solid conductor AWG 24.

TAIL LENGTH

1: 2.80 mm (0.110").
2: 3.80 mm (0.150").
3: 4.80 mm (0.190").
4: 6.35 mm (0.250").
5: 3.25 mm (0.127").
6: 3.56 mm (0.140").
7: 4.37 mm (0.172").

Tolerance: ± 0.38 mm (0.015").
Other lengths available on request.

CONNECTORS ARE SUPPLIED WITH ANTI-STATIC PROTECTIVE DUST CAPS

©2018, AXON'CABLE - RELEASED SEPTEMBER 2025/C - www.axon-cable.com

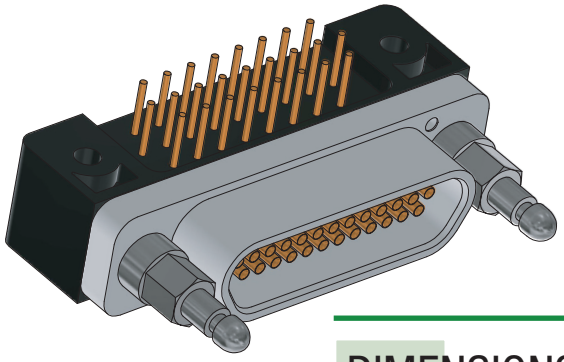

CBR TYPE
0.075" PITCH

DIMENSIONS
Dimensions are in millimetres (inches).

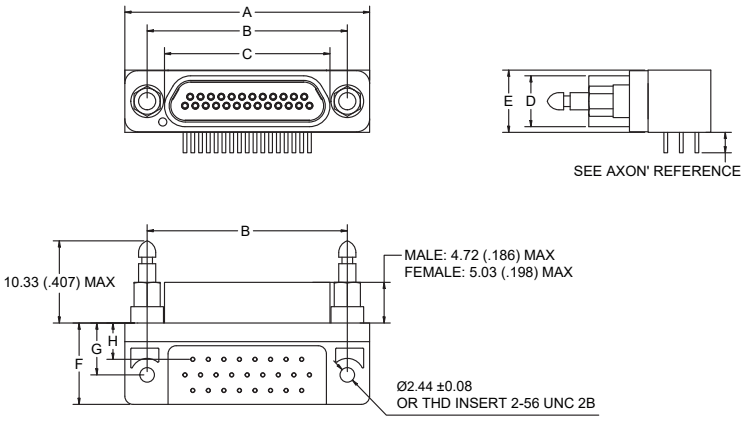

SEE CONTACT LAYOUT ON PCB PAGES 30 & 31

	A max.	B ± 0.13 (±.005)	C max.		D max.		E max.	F max.	G ± 0.25 (±.010)	H ± 0.25 (±.010)
			Male	Female	Male	Female				
9 P / 9 S	19.94 .785	14.35 .565	8.48 .334	10.16 .400	4.69 .185	6.35 .250	7.82 .308	10.16 .400	6.35 .250	5.40 .213
15 P / 15 S	23.75 .935	18.16 .715	12.29 .484	14.00 .551	4.69 .185	6.35 .250	7.82 .308	10.16 .400	6.35 .250	4.45 .175
21 P / 21 S	27.56 1.085	21.97 .865	16.10 .634	17.81 .701	4.69 .185	6.35 .250	7.82 .308	10.16 .400	6.35 .250	4.45 .175
25 P / 25 S	30.10 1.185	24.51 .965	18.64 .734	20.35 .801	4.69 .185	6.35 .250	7.82 .308	10.16 .400	6.35 .250	4.45 .175
31 P / 31 S	33.91 1.335	28.32 1.115	22.45 .884	24.16 .951	4.69 .185	6.35 .250	7.82 .308	10.16 .400	6.35 .250	4.45 .175
37 P / 37 S	37.72 1.485	32.13 1.265	26.26 1.034	27.96 1.101	4.69 .185	6.35 .250	7.82 .308	10.16 .400	6.35 .250	4.45 .175
51 P / 51 S	36.45 1.435	30.86 1.215	24.99 .984	26.70 1.051	5.79 .228	7.44 .293	8.92 .351	12.45 .490	7.62 .300	4.76 .188

SUMMARY OF CHARACTERISTICS

ELECTRICAL & MECHANICAL PERFORMANCE	
CURRENT RATING	3 A max.
CONTACT RESISTANCE	8 mΩ max.
INSULATION RESISTANCE	5000 MΩ min. @ 500 VDC
DIELECTRIC WITHSTANDING VOLTAGE	Sea level: 600 VDC
	Altitude 21 km: 150 VDC
CONTACT ENGAGING FORCE	170 g max.
CONTACT SEPARATING FORCE	14 g min.
CONTACT RETENTION	2.26 kg (5 lbs)
DURABILITY	500 mating cycles min.
VIBRATION	20g's – No discontinuity > 1 µs
SHOCK	50g's – No discontinuity > 1 µs

MATERIAL & FINISH	
SHELL	Aluminium alloy 6061 with electroless nickel
MOULDED INSULATOR	Liquid Crystal Polymer (LCP)
INTERFACIAL SEAL	Fluorosilicone rubber
PIN CONTACT	Copper and beryllium copper, gold over nickel plating
SOCKET CONTACT	Copper alloy, gold over nickel plating
ENCAPSULANT	Epoxy resin
MOULDED TRAY	Liquid Crystal Polymer (LCP)
LATCH-POSTS / HARDWARE	300 series stainless steel, passivated

©2018, AXON'CABLE - RELEASED SEPTEMBER 2025/C - www.axon-cable.com

PCB LAYOUT FOR CBR TYPE - 0.075" PITCH - 75RB MALE CONNECTORS

VIEW A

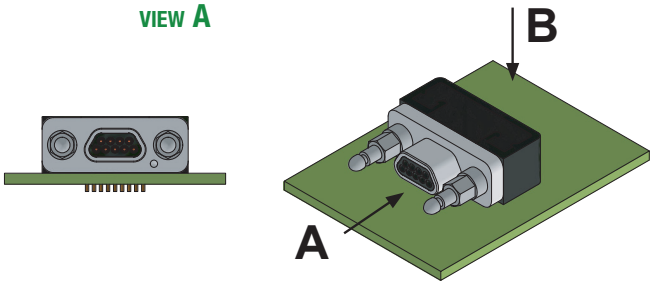

9 CONTACTS - VIEW B

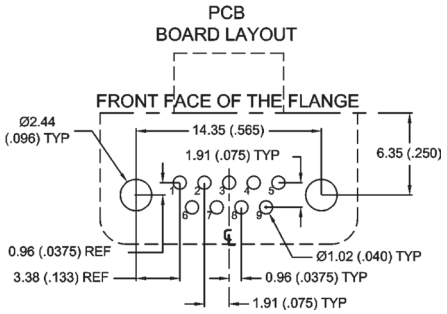

15 CONTACTS - VIEW B

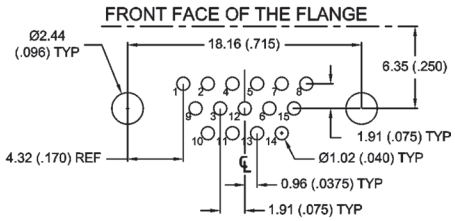

21 CONTACTS - VIEW B

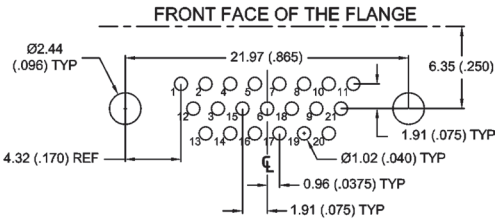

25 CONTACTS - VIEW B

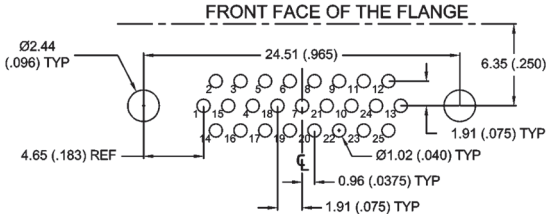

31 CONTACTS - VIEW B

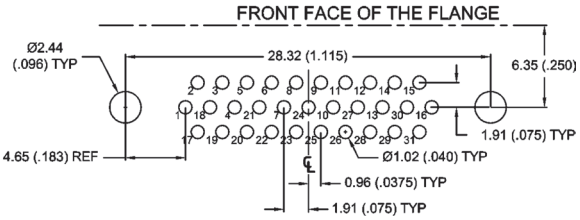

37 CONTACTS - VIEW B

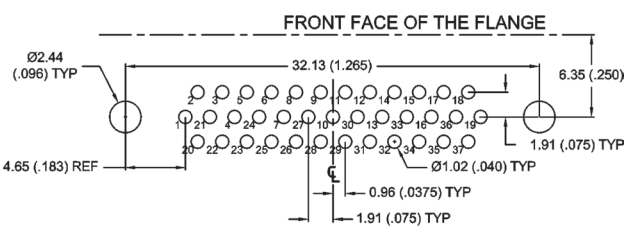

51 CONTACTS - VIEW B

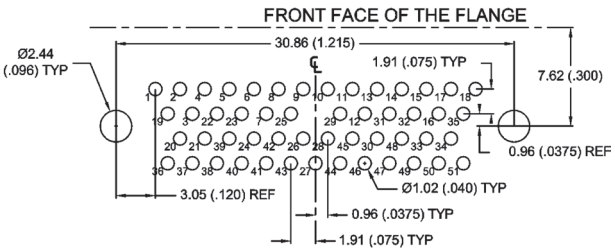

©2018, AXON'CABLE - RELEASED SEPTEMBER 2025/C - www.axon-cable.com

PCB LAYOUT FOR CBR TYPE - 0.075" PITCH - 75RB FEMALE CONNECTORS

VIEW A

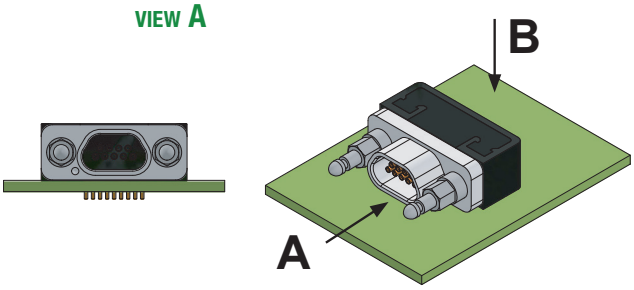

9 CONTACTS - VIEW B

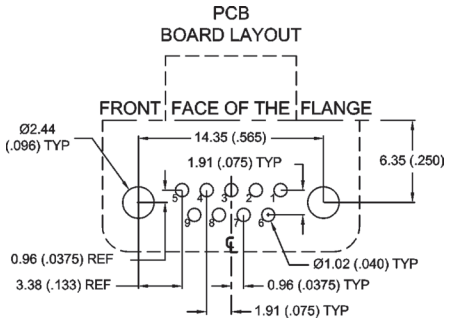

15 CONTACTS - VIEW B

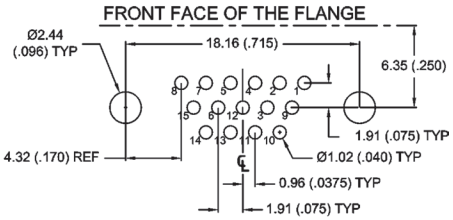

21 CONTACTS - VIEW B

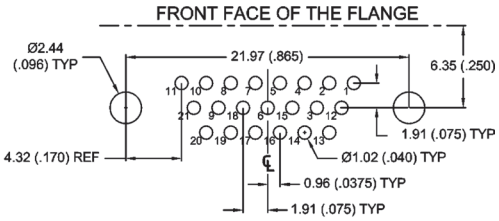

25 CONTACTS - VIEW B

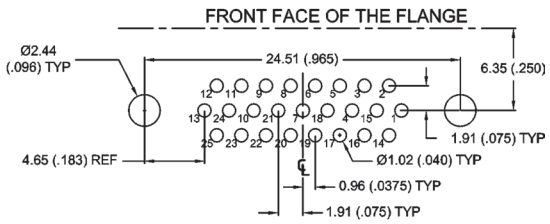

31 CONTACTS - VIEW B

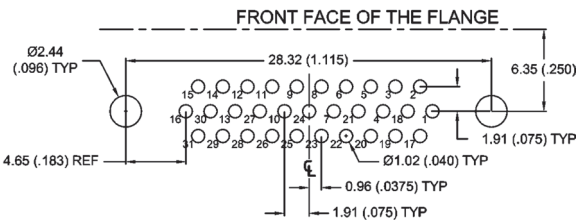

37 CONTACTS - VIEW B

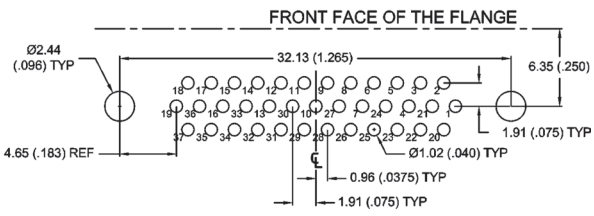

51 CONTACTS - VIEW B

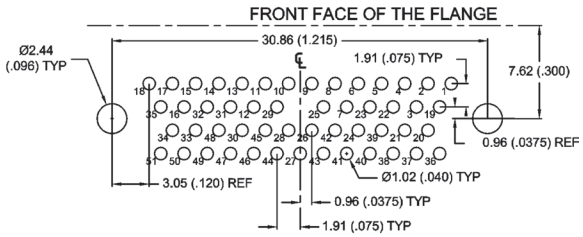

©2018, AXON'CABLE - RELEASED SEPTEMBER 2025/C - www.axon-cable.com

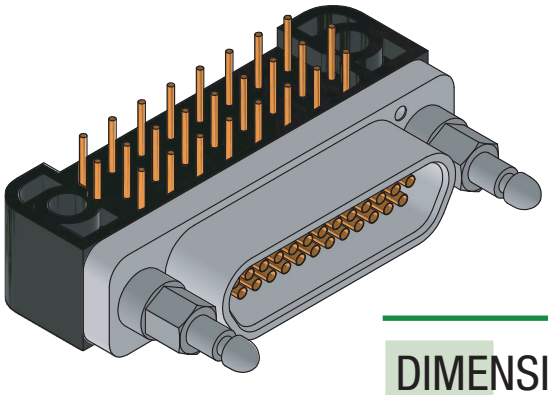

CBR TYPE
0.075" PITCH - MIL LAYOUT

DIMENSIONS
Dimensions are in millimetres (inches).

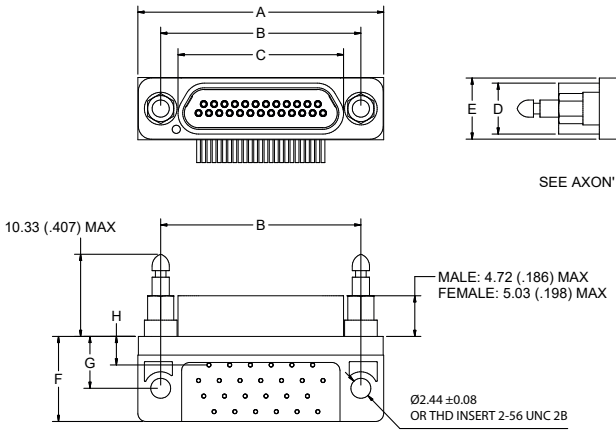

SEE CONTACT LAYOUT ON PCB PAGES 33 & 34

	A max.	B ± 0.13 (±.005)	C max.		D max.		E max.	F max.	G ± 0.25 (±.010)	H ± 0.25 (±.010)
			Male	Female	Male	Female				
9 P / 9 S	19.94 .785	14.35 .565	8.48 .334	10.16 .400	4.69 .185	6.35 .250	7.82 .308	10.60 .417	6.35 .250	3.49 .138
15 P / 15 S	23.75 .935	18.16 .715	12.29 .484	14.00 .551	4.69 .185	6.35 .250	7.82 .308	10.60 .417	6.35 .250	3.49 .138
21 P / 21 S	27.56 1.085	21.97 .865	16.10 .634	17.81 .701	4.69 .185	6.35 .250	7.82 .308	10.60 .417	6.35 .250	3.49 .138
25 P / 25 S	30.10 1.185	24.51 .965	18.64 .734	20.35 .801	4.69 .185	6.35 .250	7.82 .308	10.60 .417	6.35 .250	3.49 .138
31 P / 31 S	33.91 1.335	28.32 1.115	22.45 .884	24.16 .951	4.69 .185	6.35 .250	7.82 .308	10.60 .417	6.35 .250	3.49 .138
37 P / 37 S	37.72 1.485	32.13 1.265	26.26 1.034	27.96 1.101	4.69 .185	6.35 .250	7.82 .308	10.60 .417	6.35 .250	3.49 .138
51 P / 51 S	36.45 1.435	30.86 1.215	24.99 .984	26.70 1.051	5.79 .228	7.44 .293	8.92 .351	12.90 .508	7.49 .295	3.68 .145

SUMMARY OF CHARACTERISTICS

ELECTRICAL & MECHANICAL PERFORMANCE	
CURRENT RATING	3 A max.
CONTACT RESISTANCE	8 mΩ max.
INSULATION RESISTANCE	5000 MΩ min. @ 500 VDC
DIELECTRIC WITHSTANDING VOLTAGE	Sea level: 600 VDC
	Altitude 21 km: 150 VDC
CONTACT ENGAGING FORCE	170 g max.
CONTACT SEPARATING FORCE	14 g min.
CONTACT RETENTION	2.26 kg (5 lbs)
DURABILITY	500 mating cycles min.
VIBRATION	20g's – No discontinuity > 1 µs
SHOCK	50g's – No discontinuity > 1 µs

MATERIAL & FINISH	
SHELL	Aluminium alloy 6061 with electroless nickel
MOULDED INSULATOR	Liquid Crystal Polymer (LCP)
INTERFACIAL SEAL	Fluorosilicone rubber
PIN CONTACT	Copper and beryllium copper, gold over nickel plating
SOCKET CONTACT	Copper alloy, gold over nickel plating
ENCAPSULANT	Epoxy resin
MOULDED TRAY	Liquid Crystal Polymer (LCP)
LATCH-POSTS / HARDWARE	300 series stainless steel, passivated

©2018, AXON'CABLE - RELEASED SEPTEMBER 2025/C - www.axon-cable.com

PCB LAYOUT FOR CBR TYPE - 0.075" PITCH - 75RC
BASED ON BS MIL STANDARD LAYOUT - MALE CONNECTORS

VIEW A

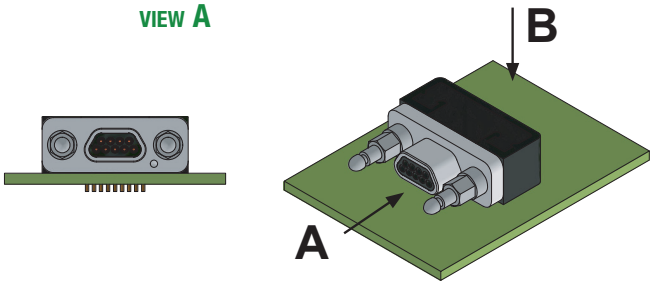

9 CONTACTS - VIEW B

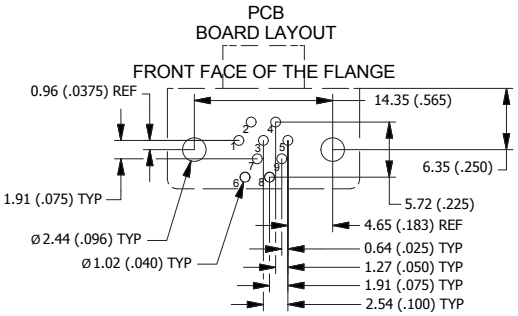

15 CONTACTS - VIEW B

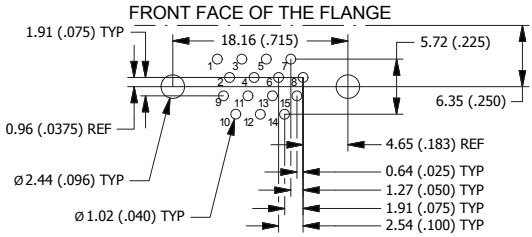

21 CONTACTS - VIEW B

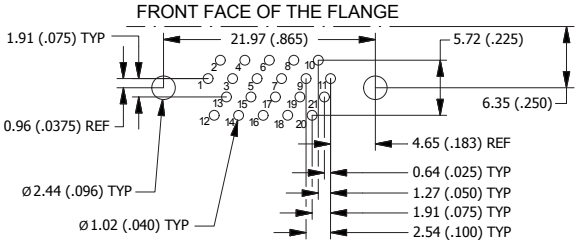

25 CONTACTS - VIEW B

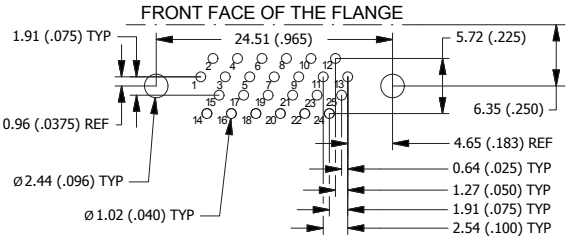

31 CONTACTS - VIEW B

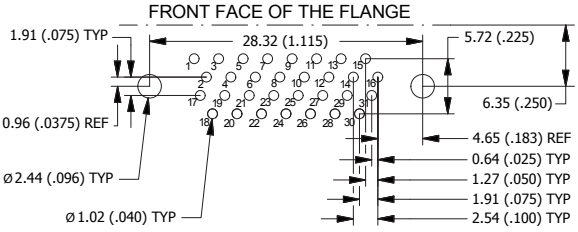

37 CONTACTS - VIEW B

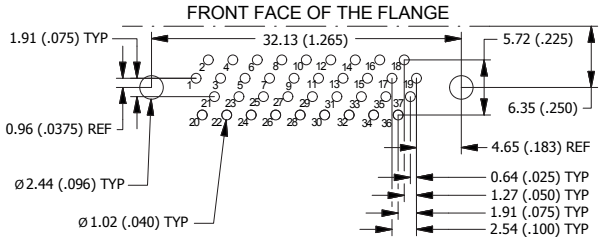

51 CONTACTS - VIEW B

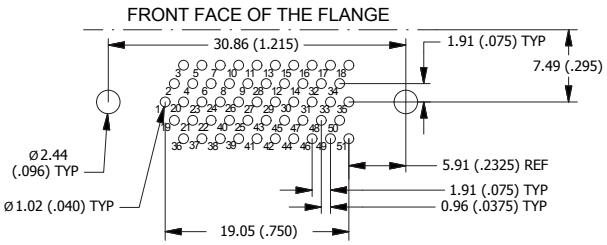

©2018, AXON'CABLE - RELEASED SEPTEMBER 2025/C - www.axon-cable.com

PCB LAYOUT FOR CBR TYPE - 0.075" PITCH - 75RC
BASED ON BS MIL STANDARD LAYOUT - FEMALE CONNECTORS

VIEW A

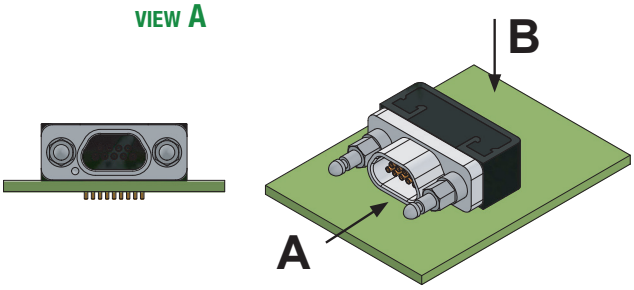

9 CONTACTS - VIEW B

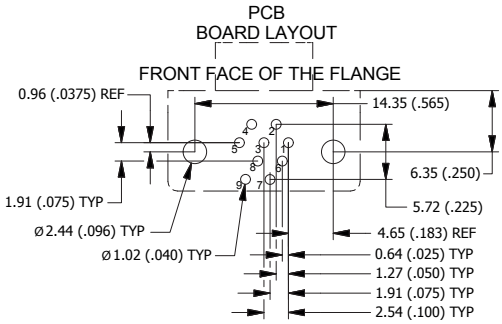

15 CONTACTS - VIEW B

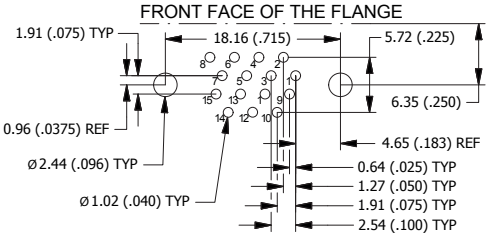

21 CONTACTS - VIEW B

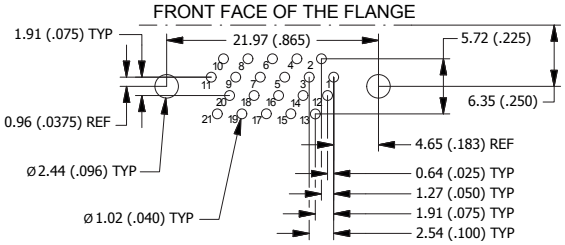

25 CONTACTS - VIEW B

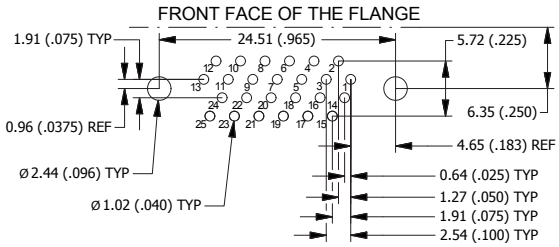

31 CONTACTS - VIEW B

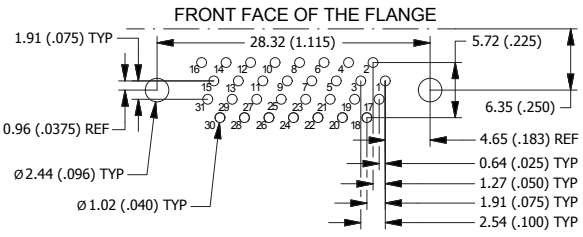

37 CONTACTS - VIEW B

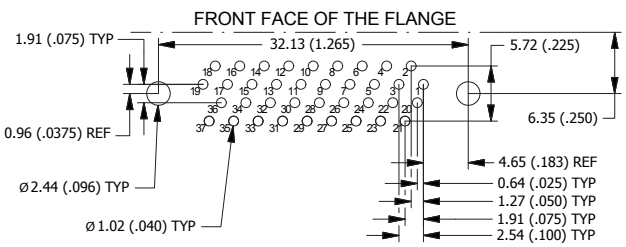

51 CONTACTS - VIEW B

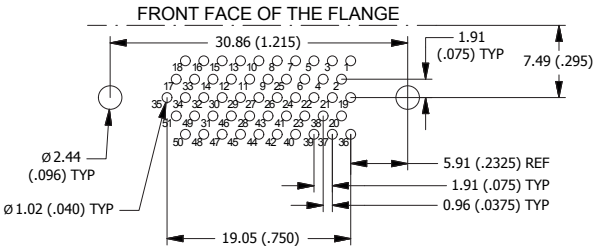

©2018, AXON'CABLE - RELEASED SEPTEMBER 2025/C - www.axon-cable.com

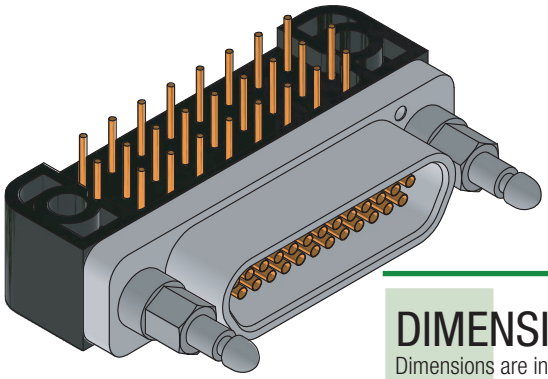

CBR TYPE
0.100" PITCH

DIMENSIONS
Dimensions are in millimetres (inches).

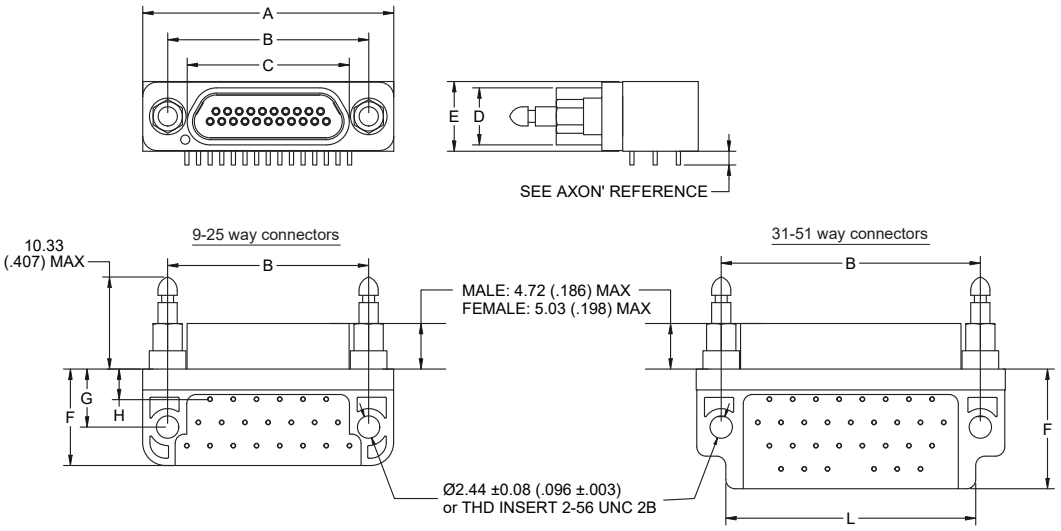

SEE CONTACT LAYOUT ON PCB PAGES 37 & 38

	A max.	B ± 0.13 (±.005)	C max.		D max.		E max.	F max.	G ± 0.25 (±.010)	H ± 0.25 (±.010)	L max.
			Male	Female	Male	Female					
9 P / 9 S	19.94 .785	14.35 .565	8.48 .334	10.16 .400	4.69 .185	6.35 .250	7.82 .308	10.80 .425	6.35 .250	5.84 .230	-
15 P / 15 S	23.75 .935	18.16 .715	12.29 .484	14.00 .551	4.69 .185	6.35 .250	7.82 .308	10.80 .425	6.35 .250	3.30 .130	-
21 P / 21 S	27.56 1.085	21.97 .865	16.10 .634	17.81 .701	4.69 .185	6.35 .250	7.82 .308	10.80 .425	6.35 .250	3.30 .130	-
25 P / 25 S	30.10 1.185	24.51 .965	18.64 .734	20.35 .801	4.69 .185	6.35 .250	7.82 .308	10.80 .425	6.35 .250	3.30 .130	-
31 P / 31 S	33.91 1.335	28.32 1.115	22.45 .884	24.16 .951	4.69 .185	6.35 .250	7.82 .308	13.34 .525	6.35 .250	3.30 .130	27.69 1.090
37 P / 37 S	37.72 1.485	32.13 1.265	26.26 1.034	27.96 1.101	4.69 .185	6.35 .250	7.82 .308	13.34 .525	6.35 .250	3.30 .130	30.23 1.190
51 P / 51 S	36.45 1.435	30.86 1.215	24.99 .984	26.70 1.051	5.79 .228	7.44 .293	8.92 .351	16.76 .660	7.62 .300	3.81 .150	31.24 1.230

SUMMARY OF CHARACTERISTICS

ELECTRICAL & MECHANICAL PERFORMANCE	
CURRENT RATING	3 A max.
CONTACT RESISTANCE	8 mΩ max.
INSULATION RESISTANCE	5000 MΩ min. @ 500 VDC
DIELECTRIC WITHSTANDING VOLTAGE	Sea level: 600 VDC
	Altitude 21 km: 150 VDC
CONTACT ENGAGING FORCE	170 g max.
CONTACT SEPARATING FORCE	14 g min.
CONTACT RETENTION	2.26 kg (5 lbs)
DURABILITY	500 mating cycles min.
VIBRATION	20g's – No discontinuity > 1 µs
SHOCK	50g's – No discontinuity > 1 µs

MATERIAL & FINISH	
SHELL	Aluminium alloy 6061 with electroless nickel
MOULDED INSULATOR	Liquid Crystal Polymer (LCP)
INTERFACIAL SEAL	Fluorosilicone rubber
PIN CONTACT	Copper and beryllium copper, gold over nickel plating
SOCKET CONTACT	Copper alloy, gold over nickel plating
ENCAPSULANT	Epoxy resin
MOULDED TRAY	Liquid Crystal Polymer (LCP)
LATCH-POSTS / HARDWARE	300 series stainless steel, passivated

©2018, AXON'CABLE - RELEASED SEPTEMBER 2025/C - www.axon-cable.com

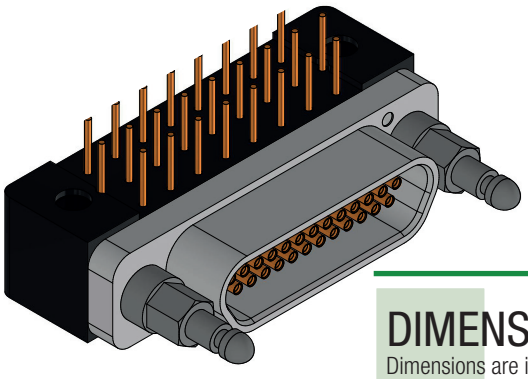

CHR TYPE
0.100" PITCH

DIMENSIONS
Dimensions are in millimetres (inches).

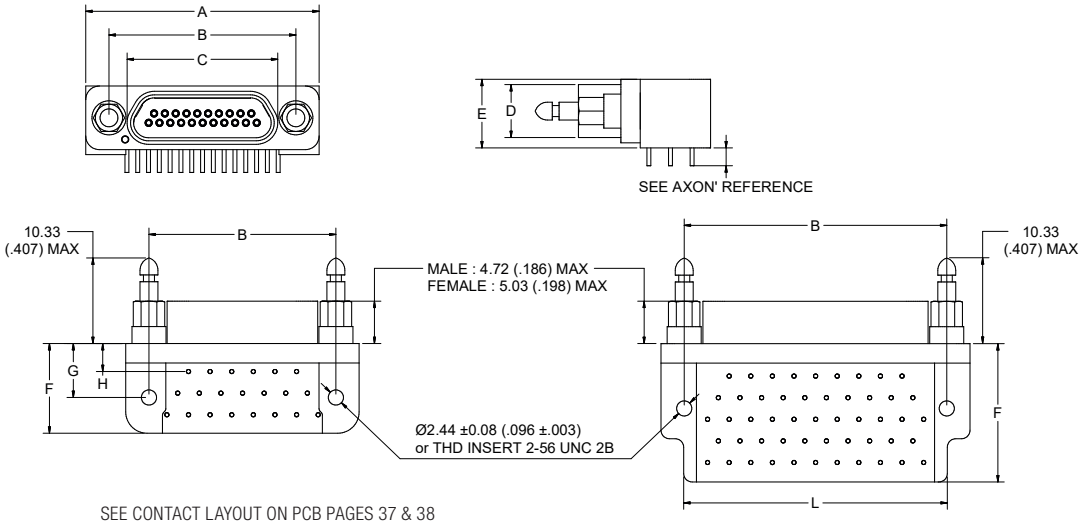

SEE CONTACT LAYOUT ON PCB PAGES 37 & 38

	A max.	B ± 0.13 (±.005)	C max.		D max.		E max.	F max.	G ± 0.25 (±.010)	H ± 0.25 (±.010)	L max.
			Male	Female	Male	Female					
9 P / 9 S	19.94 .785	14.35 .565	8.48 .334	10.16 .400	4.69 .185	6.35 .250	8.26 .325	10.80 .425	6.35 .250	5.84 .230	-
15 P / 15 S	23.75 .935	18.16 .715	12.29 .484	14.00 .551	4.69 .185	6.35 .250	8.26 .325	10.80 .425	6.35 .250	3.30 .130	-
21 P / 21 S	27.56 1.085	21.97 .865	16.10 .634	17.81 .701	4.69 .185	6.35 .250	8.26 .325	10.80 .425	6.35 .250	3.30 .130	-
25 P / 25 S	30.10 1.185	24.51 .965	18.64 .734	20.35 .801	4.69 .185	6.35 .250	8.26 .325	10.80 .425	6.35 .250	3.30 .130	-
31 P / 31 S	33.91 1.335	28.32 1.115	22.45 .884	24.16 .951	4.69 .185	6.35 .250	8.26 .325	13.34 .525	6.35 .250	3.30 .130	27.69 1.090
37 P / 37 S	37.72 1.485	32.13 1.265	26.26 1.034	27.96 1.101	4.69 .185	6.35 .250	8.26 .325	13.34 .525	6.35 .250	3.30 .130	30.23 1.190
51 P / 51 S	36.45 1.435	30.86 1.215	24.99 .984	26.70 1.051	5.79 .228	7.44 .293	9.14 .360	16.76 .660	7.62 .300	3.81 .150	31.24 1.230

SUMMARY OF CHARACTERISTICS

ELECTRICAL & MECHANICAL PERFORMANCE	
CURRENT RATING	3 A max.
CONTACT RESISTANCE	8 mΩ max.
INSULATION RESISTANCE	5000 MΩ min. @ 500 VDC
DIELECTRIC WITHSTANDING VOLTAGE	Sea level: 600 VDC
	Altitude 21 km: 150 VDC
CONTACT ENGAGING FORCE	170 g max.
CONTACT SEPARATING FORCE	14 g min.
CONTACT RETENTION	2.26 kg (5 lbs)
DURABILITY	500 mating cycles min.
VIBRATION	20g's – No discontinuity > 1 µs
SHOCK	50g's – No discontinuity > 1 µs

MATERIAL & FINISH	
SHELL	Aluminium alloy 6061 with electroless nickel
MOULDED INSULATOR	Liquid Crystal Polymer (LCP)
INTERFACIAL SEAL	Fluorosilicone rubber
PIN CONTACT	Copper and beryllium copper, gold over nickel plating
SOCKET CONTACT	Copper alloy, gold over nickel plating
ENCAPSULANT	Epoxy resin
MOULDED TRAY	Liquid Crystal Polymer (LCP)
LATCH-POSTS / HARDWARE	300 series stainless steel, passivated

©2018, AXON'CABLE - RELEASED SEPTEMBER 2025/C - www.axon-cable.com

PCB LAYOUT FOR CBR/CHR TYPE 0.100" PITCH - MALE CONNECTORS

VIEW A

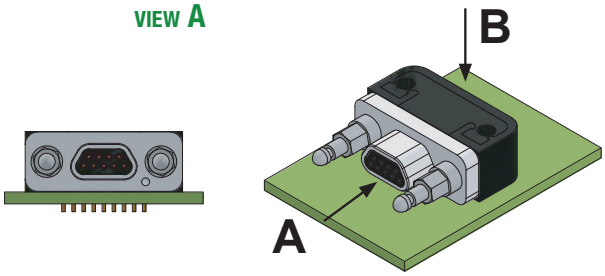

9 CONTACTS - VIEW B

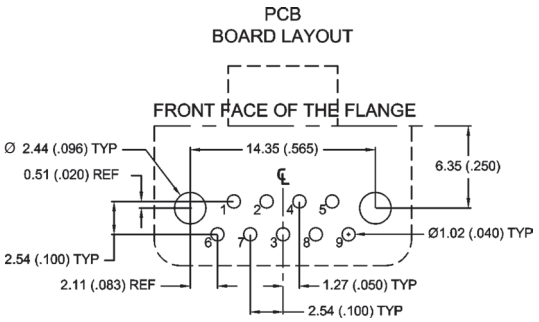

15 CONTACTS - VIEW B

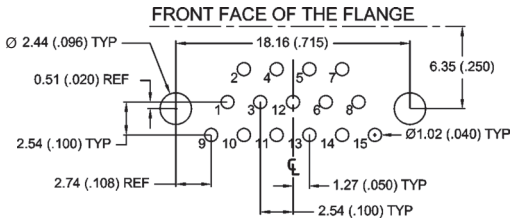

21 CONTACTS - VIEW B

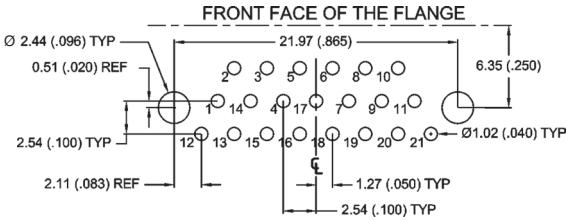

25 CONTACTS - VIEW B

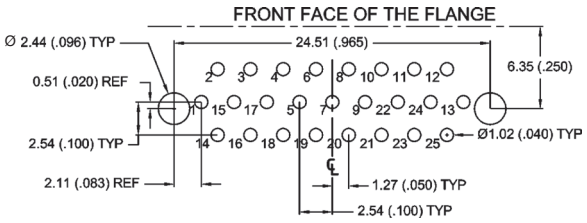

Given the very close position of pins 1 & 13 to the fixing hole pads, we recommend particular care if needing to use these pins considering the possible limits in terms of insulation distance.

31 CONTACTS - VIEW B

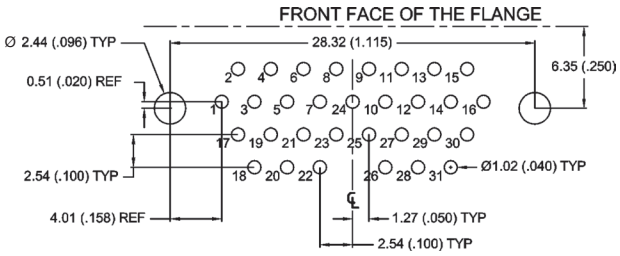

37 CONTACTS - VIEW B

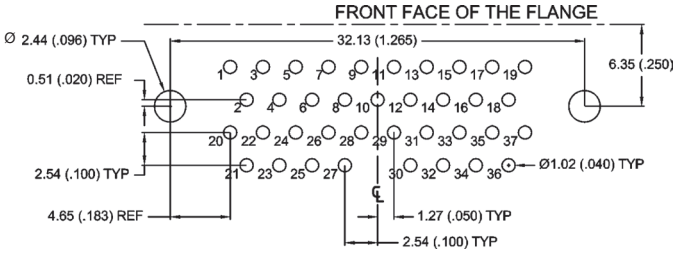

51 CONTACTS - VIEW B

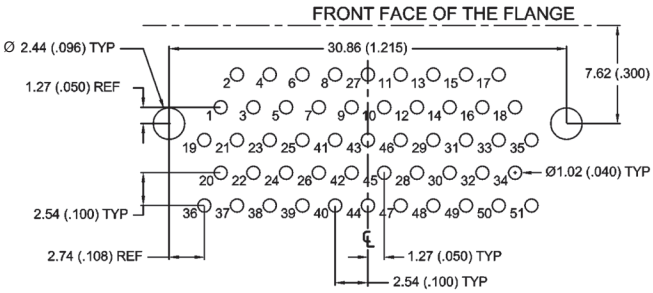

©2018, AXON'CABLE - RELEASED SEPTEMBER 2025/C - www.axon-cable.com

PCB LAYOUT FOR CBR/CHR TYPE 0.100" PITCH - FEMALE CONNECTORS

VIEW A

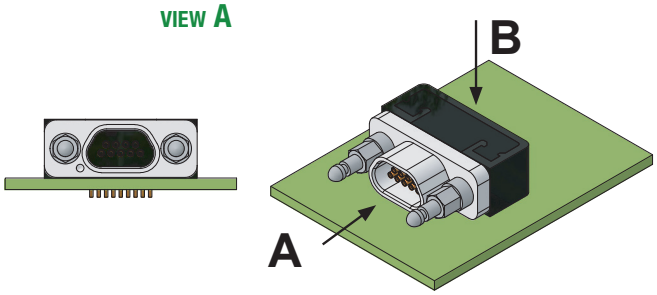

9 CONTACTS - VIEW B

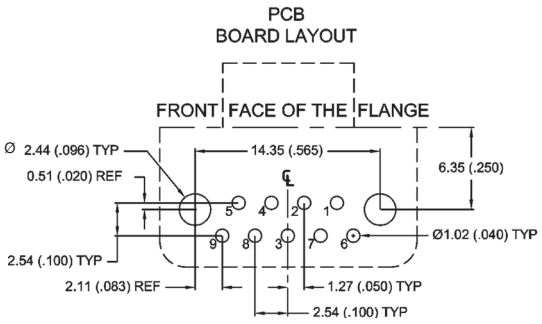

15 CONTACTS - VIEW B

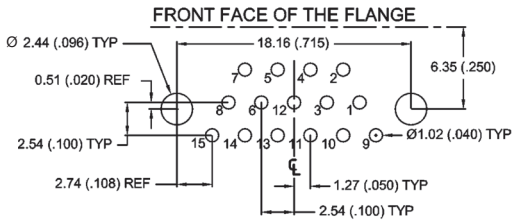

21 CONTACTS - VIEW B

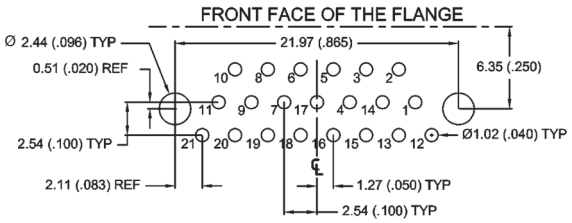

25 CONTACTS - VIEW B

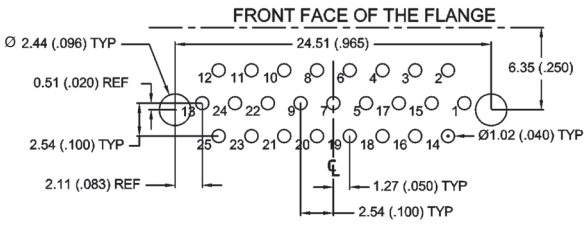

Given the very close position of pins 1 & 13 to the fixing hole pads, we recommend particular care if needing to use these pins considering the possible limits in terms of insulation distance.

31 CONTACTS - VIEW B

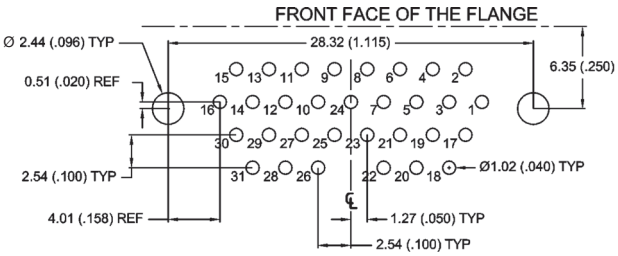

37 CONTACTS - VIEW B

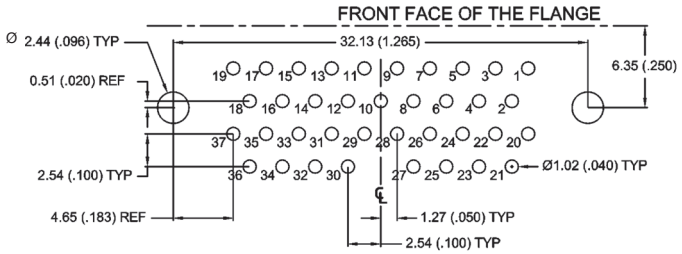

51 CONTACTS - VIEW B

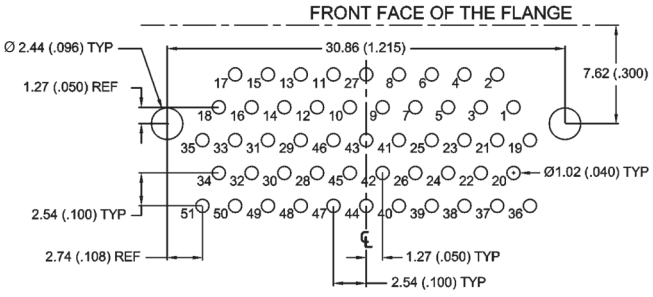

©2018, AXON'CABLE - RELEASED SEPTEMBER 2025/C - www.axon-cable.com

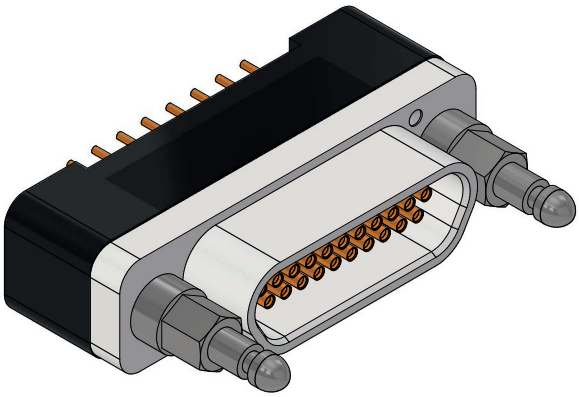

MDDCA 2 21 S 75SB H G 2

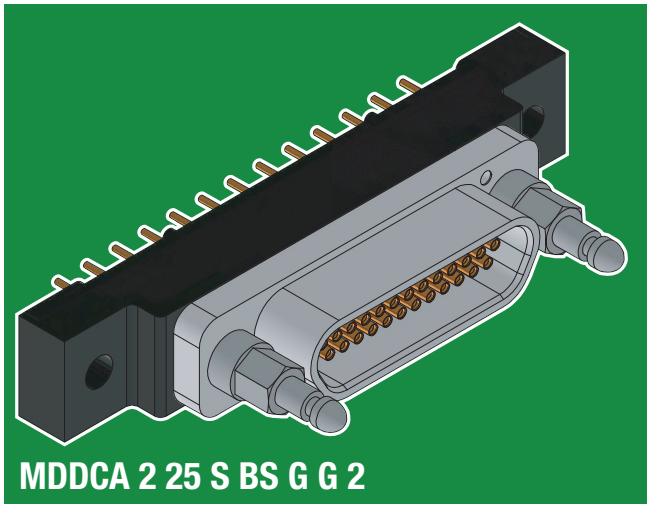

MDDCA 2 25 S BS G G 2

MICRO-D D-CLICK® STRAIGHT PCB CONNECTORS

IDENTIFICATION CODE

MDDCA	2	25	S	CBR	G	G	2

SERIES
MDDCA: Micro-D D-Click® AXON' series.

CONNECTOR TYPE
2: Nickel aluminium shell + potting 150°C.
3: Nickel aluminium shell + potting 200°C.

NUMBER OF CONTACTS
09, **15**, **21**, **25**, **31**, **37**, **51**.

CONNECTOR GENDER
P: Male (pin contacts).
S: Female (socket contacts).

PCB VERSION
BS: 0.100" Condensed Board Straight.
75SA: 0.075" Condensed Board Straight MIL Standard Layout.
75SB: 0.075" Condensed Board Straight Specific Layout.

HARDWARE
G: D-Click® latch-posts, no threaded inserts.
H: D-Click® latch-posts & threaded inserts installed.
Gx (x: 1 to 5): D-Click® latch-posts, rear panel mount, no threaded inserts.
Hx (x: 1 to 5): D-Click® latch-posts, rear panel mount and threaded inserts installed.
x= 1*: 0.8 mm thickness* ***2****: 1.2 mm thickness* ***3****: 1.6 mm thickness*
4*: 2.0 mm thickness* ***5****: 2.4 mm thickness*
See page 16 & 17 for D-Click® hardware.

CONDUCTOR TYPE
G: Gold plated solid conductor AWG 25.
T: Tin plated solid conductor AWG 24.
D: Flash gold plated solid conductor AWG 25.
X: Gold plated copper dipped in tin-lead AWG 24.
U: Gold plated solid conductor AWG 24.

TAIL LENGTH
1: 2.80 mm (0.110").
2: 3.80 mm (0.150").
3: 4.80 mm (0.190").
4: 6.35 mm (0.250").
5: 3.25 mm (0.127").
6: 3.56 mm (0.140").
7: 4.37 mm (0.172").

Tolerance: ± 0.38 mm (0.015").
Other lengths available on request.

CONNECTORS ARE SUPPLIED WITH ANTI-STATIC PROTECTIVE DUST CAPS

©2018, AXON'CABLE - RELEASED SEPTEMBER 2025/C - www.axon-cable.com

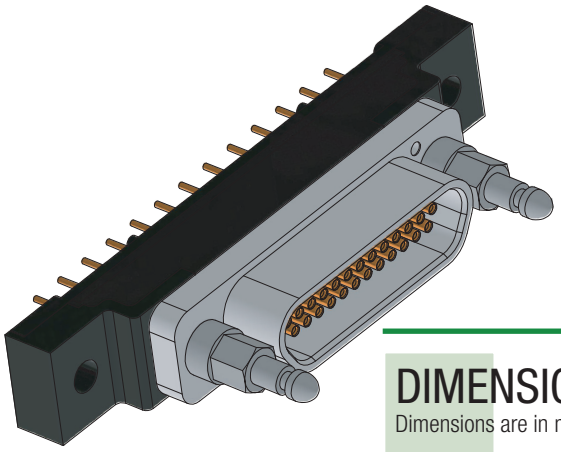

BS TYPE
0.100" PITCH

DIMENSIONS
Dimensions are in millimetres (inches).

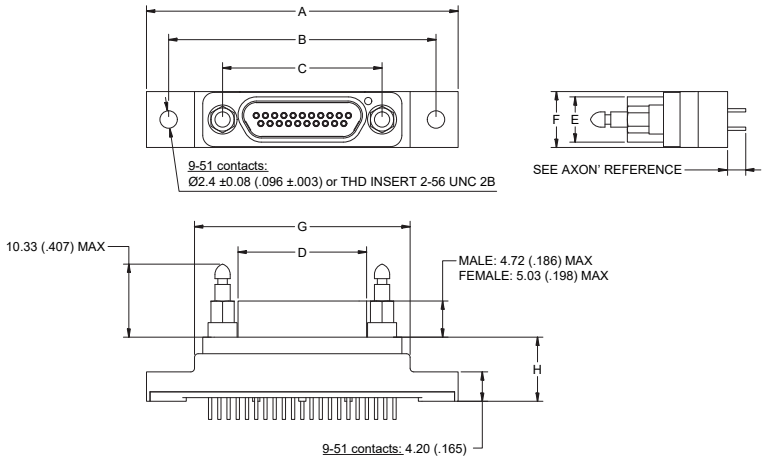

SEE CONTACT LAYOUT ON PCB PAGES 41 & 42

	A max.	B ± 0.18 (±.007)	C ± 0.13 (±.005)	D max.		E max.		F max.	G max.	H max.
				Male	Female	Male	Female			
9 P / 9 S	35.31 1.390	29.21 1.150	14.35 .565	8.48 .334	10.16 .400	4.69 .185	6.35 .250	7.82 .308	19.94 .785	9.02 .355
15 P / 15 S	35.31 1.390	29.21 1.150	18.16 .715	12.29 .484	14.00 .551	4.69 .185	6.35 .250	7.82 .308	24.00 .945	9.02 .355
21 P / 21 S	42.93 1.690	36.83 1.450	21.97 .865	16.10 .634	17.81 .701	4.69 .185	6.35 .250	7.82 .308	29.72 1.170	9.02 .355
25 P / 25 S	44.20 1.740	38.10 1.500	24.51 .965	18.64 .734	20.35 .801	4.69 .185	6.35 .250	7.82 .308	32.39 1.275	9.02 .355
31 P / 31 S	51.82 2.040	45.72 1.800	28.32 1.115	22.45 .884	24.16 .951	4.69 .185	6.35 .250	7.82 .308	40.01 1.575	9.02 .355
37 P / 37 S	59.44 2.340	53.34 2.100	32.13 1.265	26.26 1.034	27.96 1.101	4.69 .185	6.35 .250	7.82 .308	47.63 1.875	9.02 .355
51 P / 51 S	57.66 2.270	50.80 2.000	30.86 1.215	24.99 .984	26.70 1.051	5.79 .228	7.44 .293	8.92 .351	45.09 1.775	9.02 .355

SUMMARY OF CHARACTERISTICS

ELECTRICAL & MECHANICAL PERFORMANCE	
CURRENT RATING	3 A max.
CONTACT RESISTANCE	8 mΩ max.
INSULATION RESISTANCE	5000 MΩ min. @ 500 VDC
DIELECTRIC WITHSTANDING VOLTAGE	Sea level: 600 VDC
	Altitude 21 km: 150 VDC
CONTACT ENGAGING FORCE	170 g max.
CONTACT SEPARATING FORCE	14 g min.
CONTACT RETENTION	2.26 kg (5 lbs)
DURABILITY	500 mating cycles min.
VIBRATION	20g's – No discontinuity > 1 µs
SHOCK	50g's – No discontinuity > 1 µs

MATERIAL & FINISH	
SHELL	Aluminium alloy 6061 with electroless nickel
MOULDED INSULATOR	Liquid Crystal Polymer (LCP)
INTERFACIAL SEAL	Fluorosilicone rubber
PIN CONTACT	Copper and beryllium copper, gold over nickel plating
SOCKET CONTACT	Copper alloy, gold over nickel plating
ENCAPSULANT	Epoxy resin
MOULDED TRAY	Liquid Crystal Polymer (LCP)
LATCH-POSTS / HARDWARE	300 series stainless steel, passivated

©2018, AXON'CABLE - RELEASED SEPTEMBER 2025/C - www.axon-cable.com

PCB LAYOUT FOR BS TYPE
0.100" PITCH - MALE CONNECTORS

VIEW A

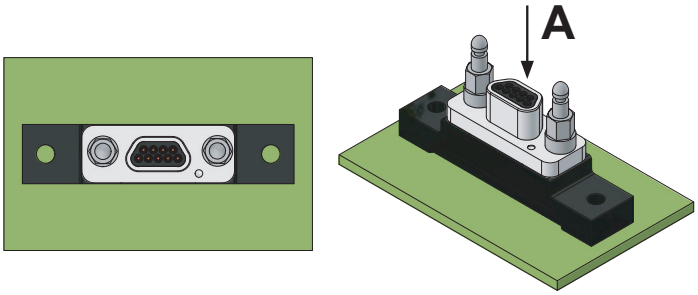

9 CONTACTS - VIEW A

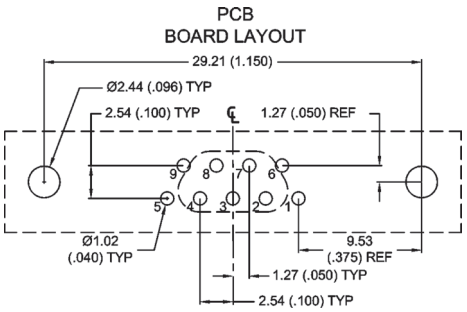

15 CONTACTS - VIEW A

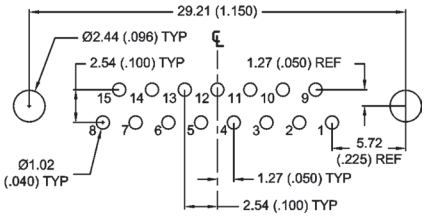

21 CONTACTS - VIEW A

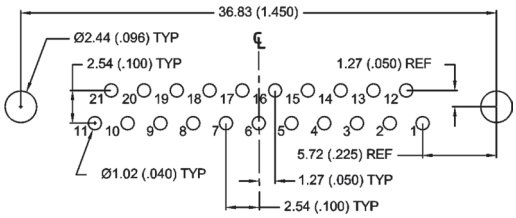

25 CONTACTS - VIEW A

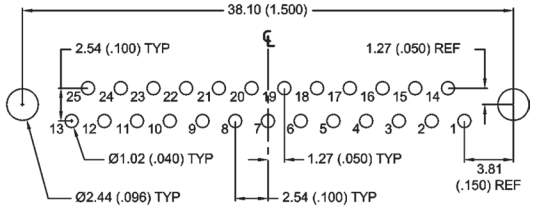

31 CONTACTS - VIEW A

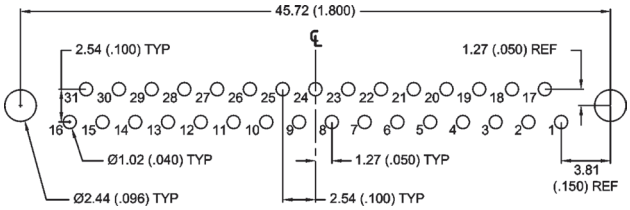

37 CONTACTS - VIEW A

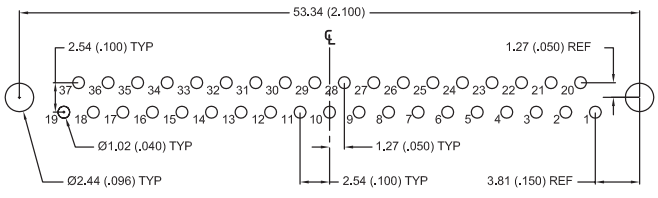

51 CONTACTS - VIEW A

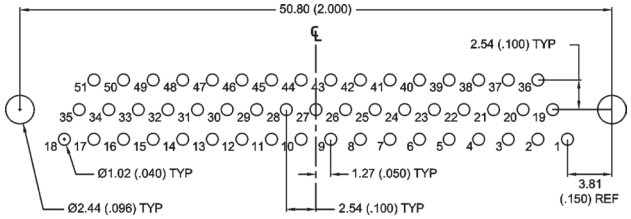

©2018, AXON'CABLE - RELEASED SEPTEMBER 2025/C - www.axon-cable.com

PCB LAYOUT FOR BS TYPE
0.100" PITCH - FEMALE CONNECTORS

VIEW A

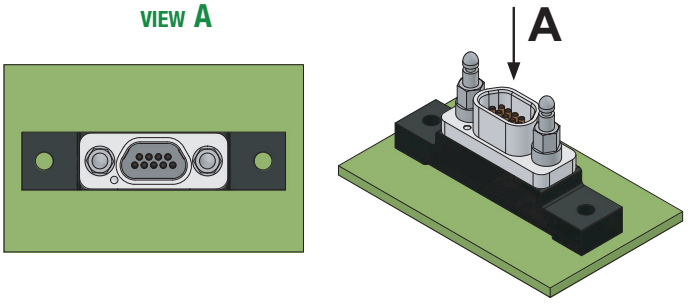

9 CONTACTS - VIEW A

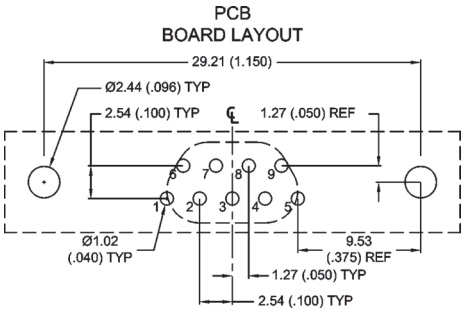

15 CONTACTS - VIEW A

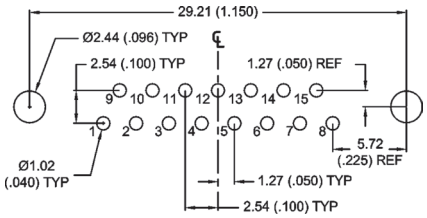

21 CONTACTS - VIEW A

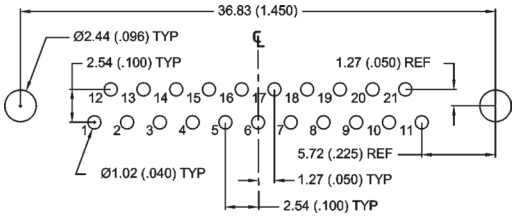

25 CONTACTS - VIEW A

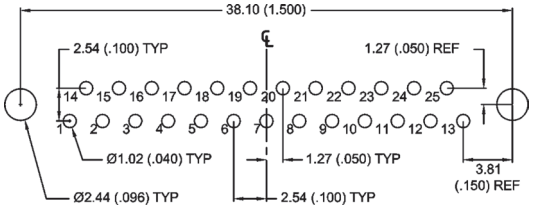

31 CONTACTS - VIEW A

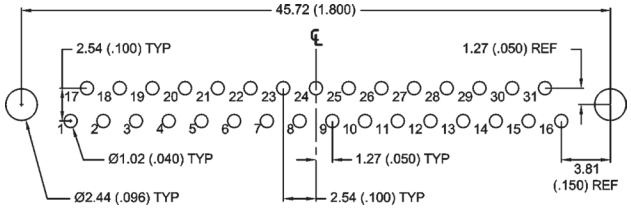

37 CONTACTS - VIEW A

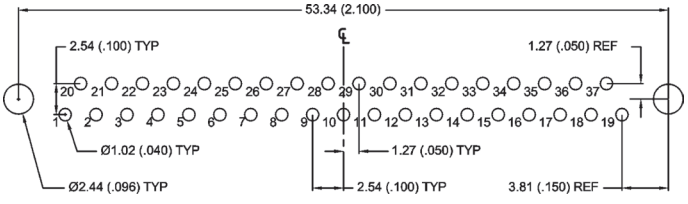

51 CONTACTS - VIEW A

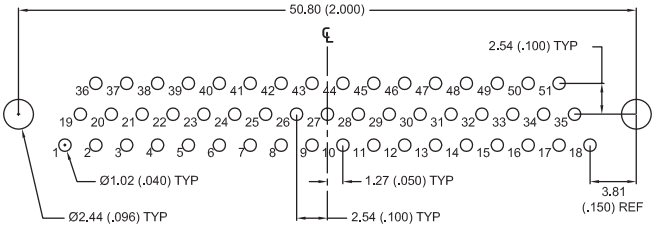

©2018, AXON'CABLE - RELEASED SEPTEMBER 2025/C - www.axon-cable.com

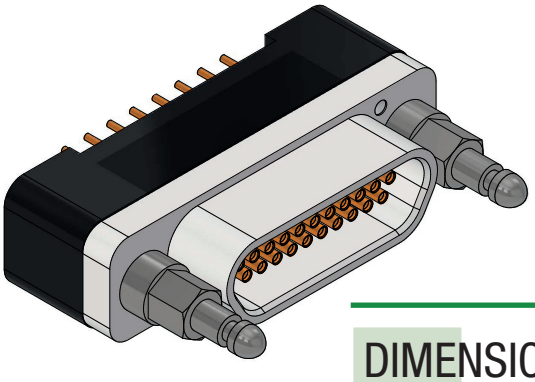

BS TYPE
0.075" PITCH

DIMENSIONS
Dimensions are in millimetres (inches).

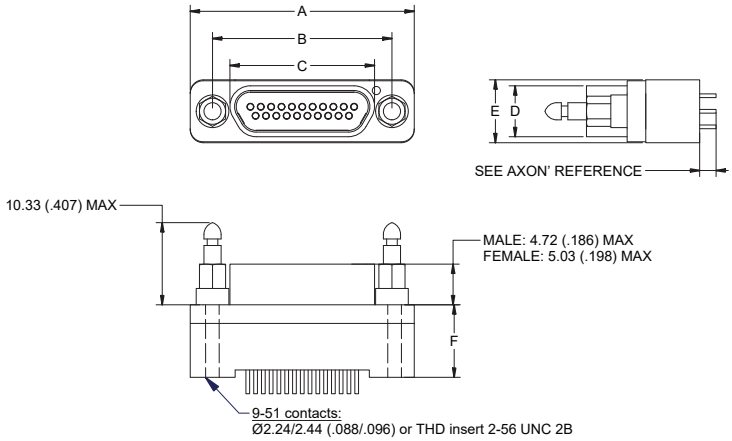

SEE CONTACT LAYOUT ON PCB PAGES 44, 45, 46 & 47

	A max.	B ± 0.13 (±.005)	C max.		D max.		E max.	F max.
			Male	Female	Male	Female		
9 P / 9 S	19.94 .785	14.35 .565	8.48 .334	10.16 .400	4.69 .185	6.35 .250	7.87 .310	9.02 .355
15 P / 15 S	23.75 .935	18.16 .715	12.29 .484	14.00 .551	4.69 .185	6.35 .250	7.87 .310	9.02 .355
21 P / 21 S	27.56 1.085	21.97 .865	16.10 .634	17.81 .701	4.69 .185	6.35 .250	7.87 .310	9.02 .355
25 P / 25 S	30.10 1.185	24.51 .965	18.64 .734	20.35 .801	4.69 .185	6.35 .250	7.87 .310	9.02 .355
31 P / 31 S	33.91 1.335	28.32 1.115	22.45 .884	24.16 .951	4.69 .185	6.35 .250	7.87 .310	9.02 .355
37 P / 37 S	37.72 1.485	32.13 1.265	26.26 1.034	27.96 1.101	4.69 .185	6.35 .250	7.87 .310	9.02 .355
51 P / 51 S	36.45 1.435	30.86 1.215	24.99 .984	26.70 1.051	5.79 .228	7.44 .293	10.16 .400	9.02 .355

SUMMARY OF CHARACTERISTICS

ELECTRICAL & MECHANICAL PERFORMANCE	
CURRENT RATING	3 A max.
CONTACT RESISTANCE	8 mΩ max.
INSULATION RESISTANCE	5000 MΩ min. @ 500 VDC
DIELECTRIC WITHSTANDING VOLTAGE	Sea level: 600 VDC
	Altitude 21 km: 150 VDC
CONTACT ENGAGING FORCE	170 g max.
CONTACT SEPARATING FORCE	14 g min.
CONTACT RETENTION	2.26 kg (5 lbs)
DURABILITY	500 mating cycles min.
VIBRATION	20g's – No discontinuity > 1 µs
SHOCK	50g's – No discontinuity > 1 µs

MATERIAL & FINISH	
SHELL	Aluminium alloy 6061 with electroless nickel
MOULDED INSULATOR	Liquid Crystal Polymer (LCP)
INTERFACIAL SEAL	Fluorosilicone rubber
PIN CONTACT	Copper and beryllium copper, gold over nickel plating
SOCKET CONTACT	Copper alloy, gold over nickel plating
ENCAPSULANT	Epoxy resin
MOULDED TRAY	Liquid Crystal Polymer (LCP)
LATCH-POSTS / HARDWARE	300 series stainless steel, passivated

©2018, AXON'CABLE - RELEASED SEPTEMBER 2025/C - www.axon-cable.com

PCB LAYOUT FOR BS TYPE - 0.075" PITCH - 75SA
MIL STANDARD LAYOUT - MALE CONNECTORS

VIEW A

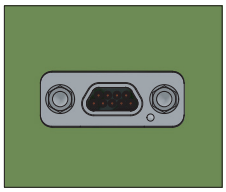

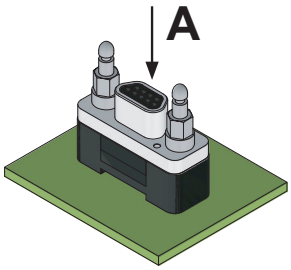

9 CONTACTS - VIEW A

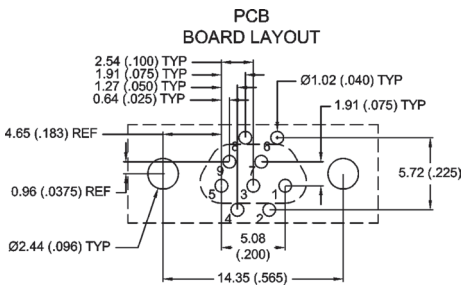

15 CONTACTS - VIEW A

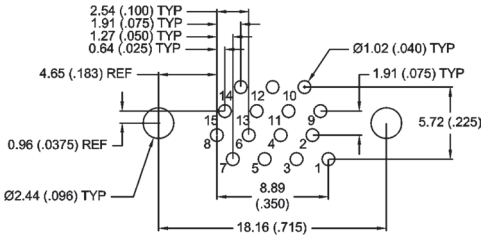

21 CONTACTS - VIEW A

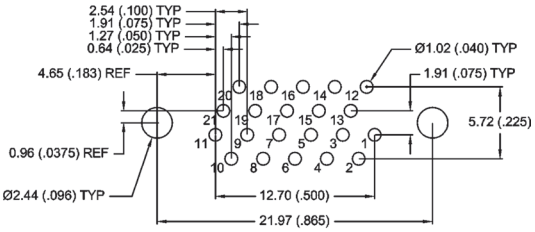

25 CONTACTS - VIEW A

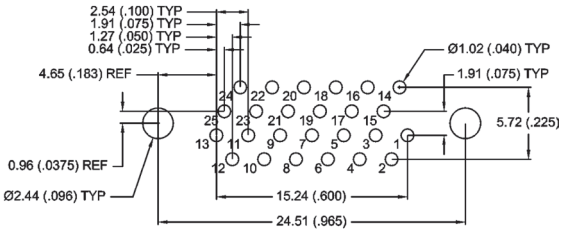

31 CONTACTS - VIEW A

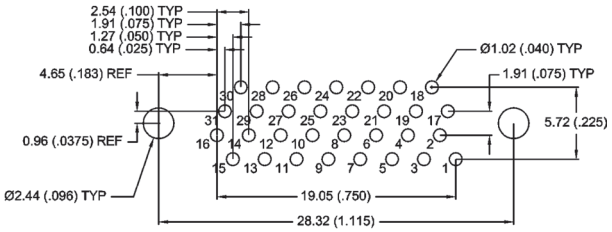

37 CONTACTS - VIEW A

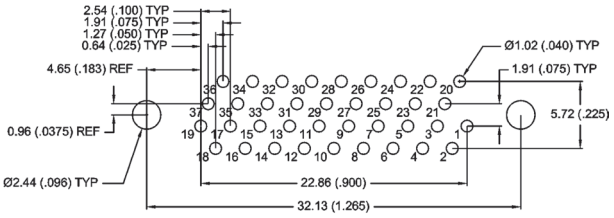

51 CONTACTS - VIEW A

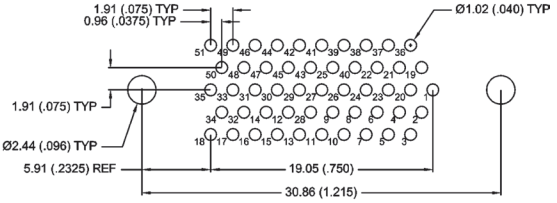

©2018, AXON'CABLE - RELEASED SEPTEMBER 2025/C - www.axon-cable.com

PCB LAYOUT FOR BS TYPE - 0.075" PITCH - 75SA
MIL STANDARD LAYOUT - FEMALE CONNECTORS

VIEW A

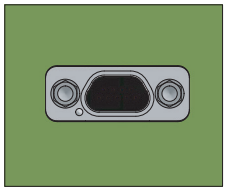

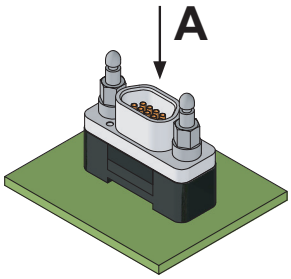

9 CONTACTS - VIEW A

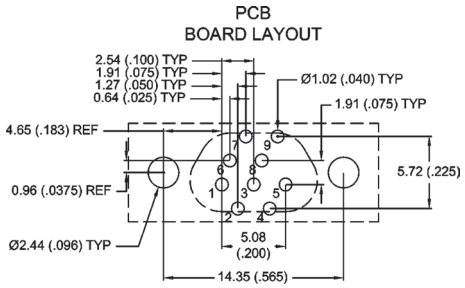

15 CONTACTS - VIEW A

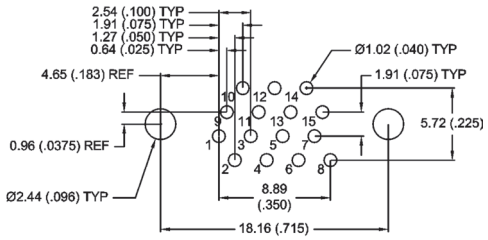

21 CONTACTS - VIEW A

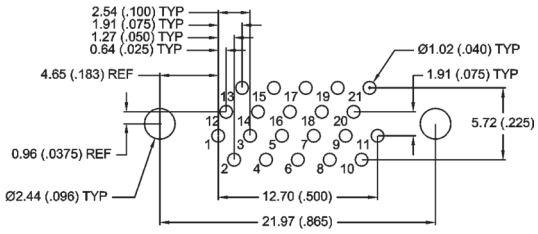

25 CONTACTS - VIEW A

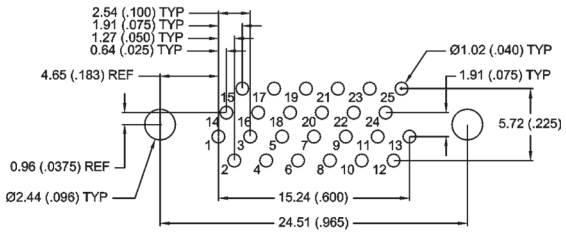

31 CONTACTS - VIEW A

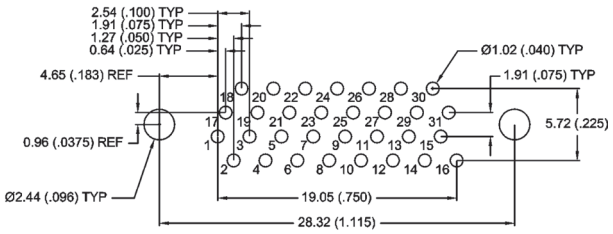

37 CONTACTS - VIEW A

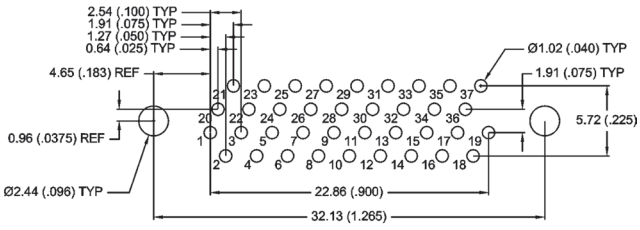

51 CONTACTS - VIEW A

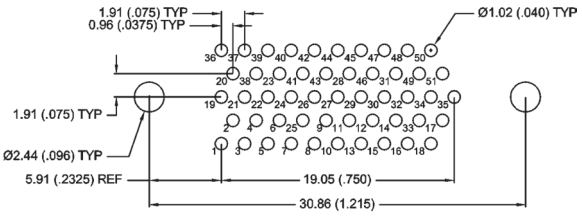

©2018, AXON'CABLE - RELEASED SEPTEMBER 2025/C - www.axon-cable.com

PCB LAYOUT FOR BS TYPE - 0.075" PITCH - 75SB
SPECIFIC LAYOUT - MALE CONNECTORS

VIEW A

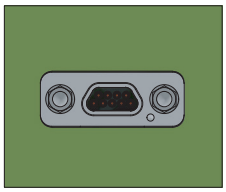

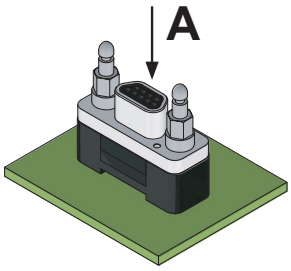

9 CONTACTS - VIEW A

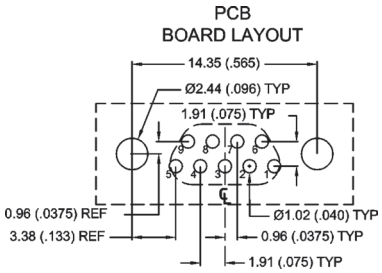

15 CONTACTS - VIEW A

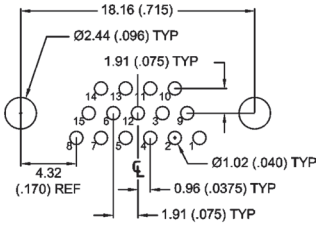

21 CONTACTS - VIEW A

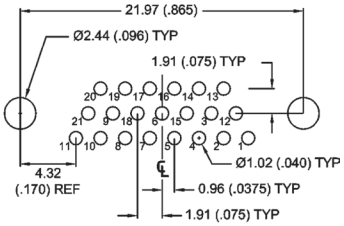

25 CONTACTS - VIEW A

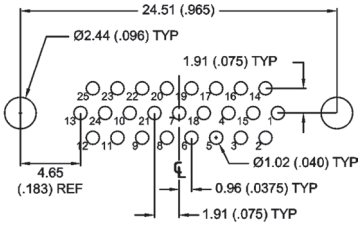

31 CONTACTS - VIEW A

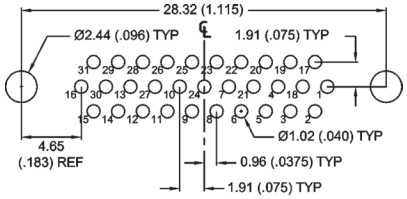

37 CONTACTS - VIEW A

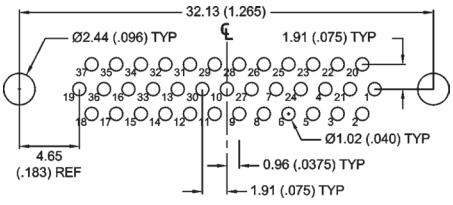

51 CONTACTS - VIEW A

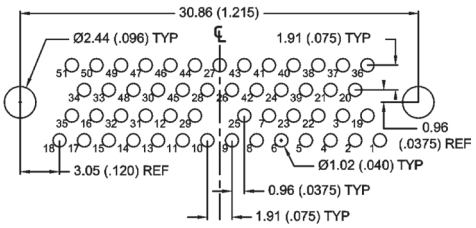

©2018, AXON'CABLE - RELEASED SEPTEMBER 2025/C - www.axon-cable.com

PCB LAYOUT FOR BS TYPE - 0.075" PITCH - 75SB
SPECIFIC LAYOUT - FEMALE CONNECTORS

VIEW A

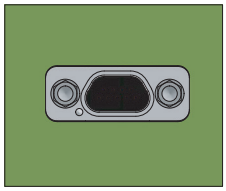

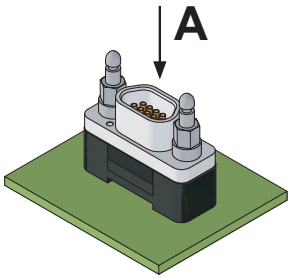

9 CONTACTS - VIEW A

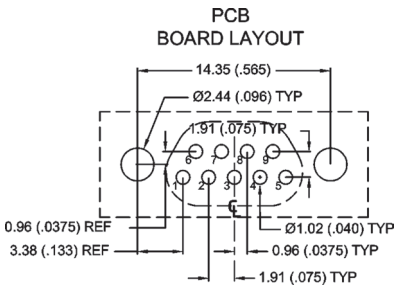

15 CONTACTS - VIEW A

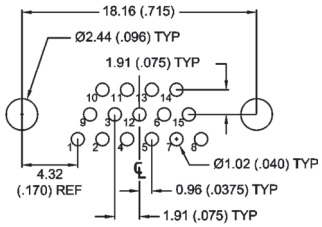

21 CONTACTS - VIEW A

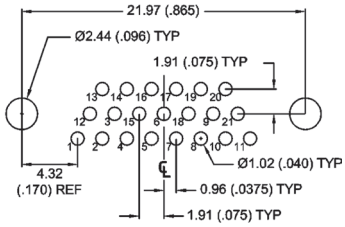

25 CONTACTS - VIEW A

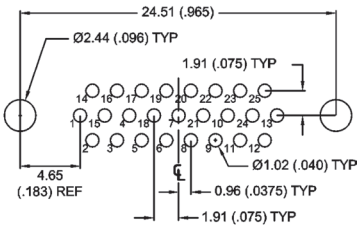

31 CONTACTS - VIEW A

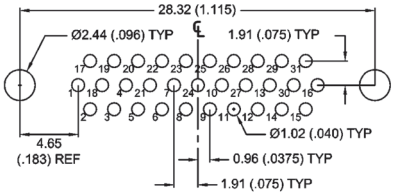

37 CONTACTS - VIEW A

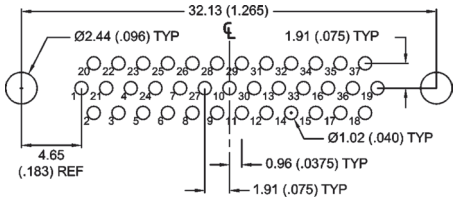

51 CONTACTS - VIEW A

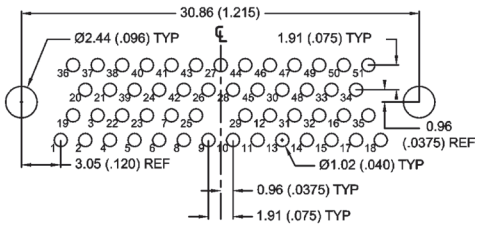

©2018, AXON'CABLE - RELEASED SEPTEMBER 2025/C - www.axon-cable.com

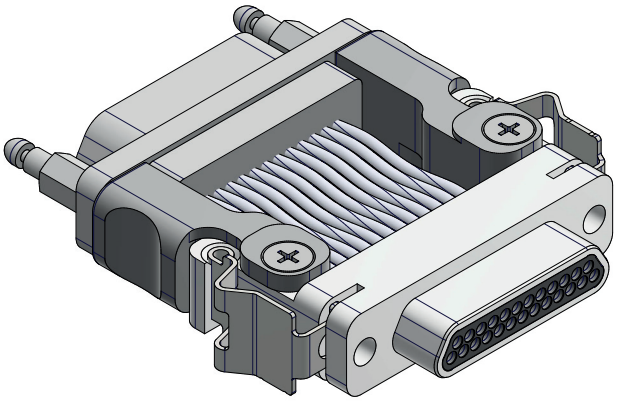

MDDCA 2 25 CS 1 1 DC1

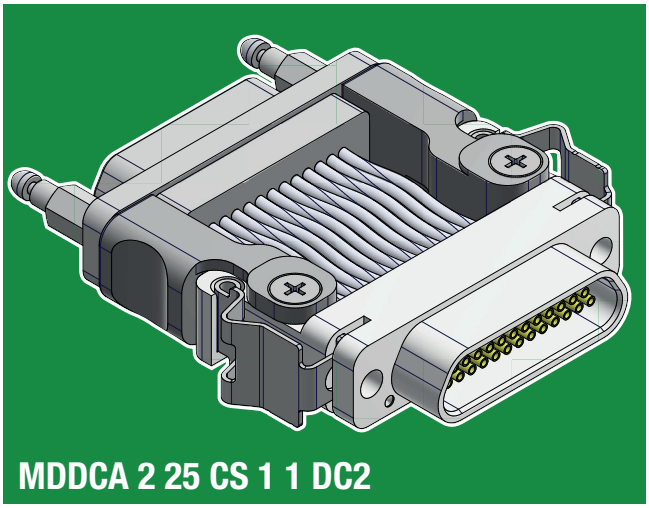

MDDCA 2 25 CS 1 1 DC2

ONE PIECE DESIGN SAVER

IDENTIFICATION CODE

MDDCA	2	25	CS	1	1	DC2

SERIES
MDDCA: Micro-D D-Click® AXON' series.

CONNECTOR TYPE
2: Nickel aluminium shell + potting 150°C.
3: Nickel aluminium shell + potting 200°C.

NUMBER OF CONTACTS
09, **15**, **21**, **25**, **31**, **37**, **51**.

PRODUCT TYPE
CS: Connector saver (Receptacle to plug connector).

ONE PIECE DESIGN ASSEMBLY
1: One piece design assembly.

WIRE TYPE
1: E2607, AWG26, 7 strands, 600V.
See page 76 for wire types.

HARDWARE ORIENTATION
DC1: Male shell with clips.
DC2: Female shell with clips.

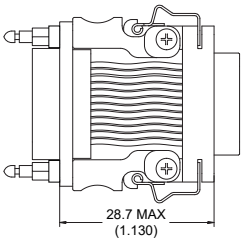

CONNECTORS ARE SUPPLIED WITH ANTI-STATIC PROTECTIVE DUST CAPS

©2018, AXON'CABLE - RELEASED SEPTEMBER 2025/C - www.axon-cable.com

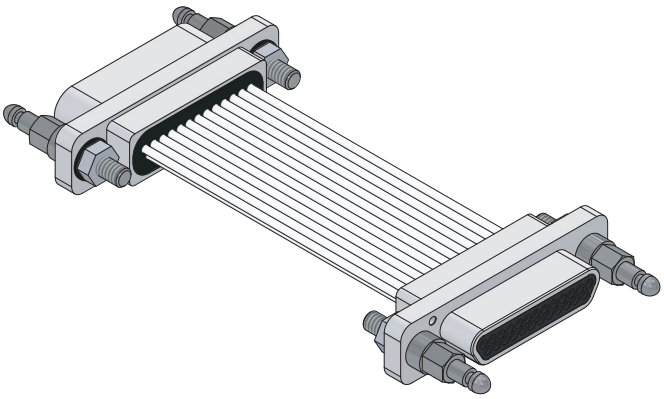

MDDCA 2 21 CS 010 1 L G G

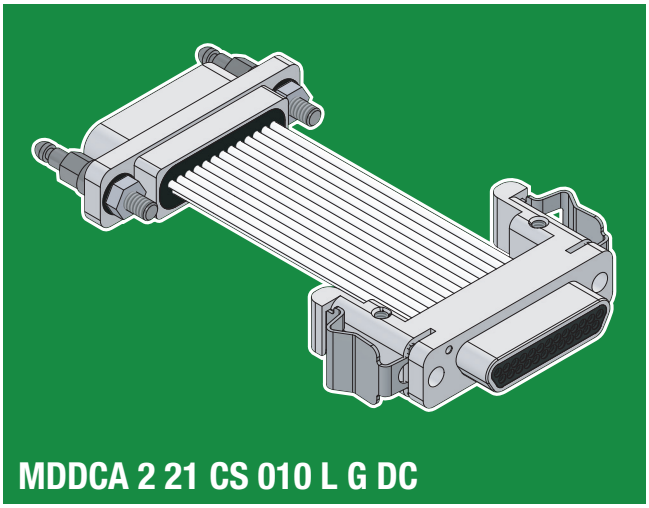

MDDCA 2 21 CS 010 L G DC

BACK-TO-BACK ASSEMBLY JUMPER

IDENTIFICATION CODE

MDDCA	2	21	CS	010	1	L	G	DC

SERIES

MDDCA: Micro-D D-Click® AXON' series.

CONNECTOR TYPE

2: Nickel aluminium shell + potting 150°C.
3: Nickel aluminium shell + potting 200°C.

NUMBER OF CONTACTS

09, **15**, **21**, **25**, **31**, **37**, **51**.

PRODUCT TYPE

CS: Connector saver (receptacle to plug connector).
DP: Dual Pin connector (plug to plug connector).
DS: Dual Socket connector (receptacle to receptacle connector).

WIRE LENGTH (cm)

Wire length in centimeters (1 cm = 10 mm = 0.394").

L in cm (inches)	5 ≤ L ≤ 10 1.97 ≤ L ≤ 3.940	10 < L ≤ 100 3.940 < L ≤ 39.40	L >100 L > 39.40
TOLERANCE in cm (inches)	-0 / +0.5 -0 / +0.200	-0 / +3 -0 / +1.180	-0 / +5 -0 / +1.970

WIRE TYPE

1: E2607, AWG26, 7 strands, 600V.
4: E2619, AMG26, 19 strands, 600V.
6: E2807, AWG28, 7 strands, 600V.
8: E3007, AWG30, 7 strands, 600V.
A: E2407, AWG24, 7 strands, 600V.
C: E2419, AWG24, 19 strands, 600V.
See page 76 for wire types.

COLOUR CODE

F: All yellow.
L: All white.
See page 78 for colour codes.

HARDWARE 1

(For CS, 1st connector is the female one.)
DC: D-Click® latch springs.
G: D-Click® latch-posts.
Gx (x: 1 to 5): D-Click® latch-posts, rear panel mount.

DC TABS
Visual inspection & locking accessory.
Replace hardware code **DC** with **DCS** for DC Tabs equipped connectors.
See page 18 for more details.

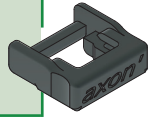

HARDWARE 2

(For CS, 2nd connector is the male one.)
DC: D-Click® latch springs.
G: D-Click® latch-posts.
Gx (x: 1 to 5): D-Click® latch-posts, rear panel mount.
x= 1*: 0.8 mm thickness* ***2****: 1.2 mm thickness* ***3****: 1.6 mm thickness*
4*: 2.0 mm thickness* ***5****: 2.4 mm thickness*
See page 16 for D-Click® hardware.

CONNECTORS ARE SUPPLIED WITH ANTI-STATIC PROTECTIVE DUST CAPS

JUMPER LINKS

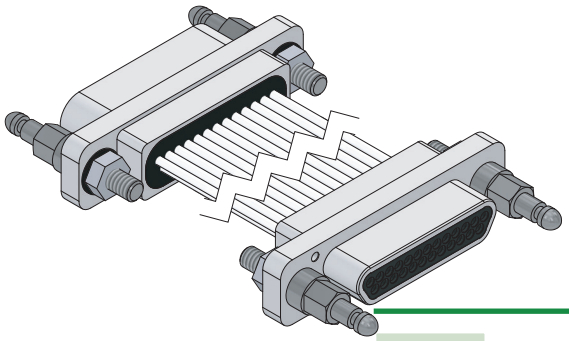

DIMENSIONS

WIRE LENGTH

WIRE LENGTH STARTING POINT FOR
LATCH-POST CONNECTORS

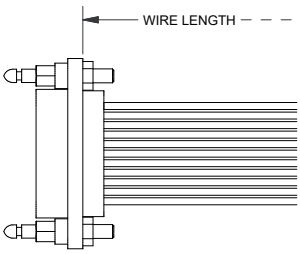

WIRE LENGTH STARTING POINT FOR
LATCH SPRING CONNECTORS

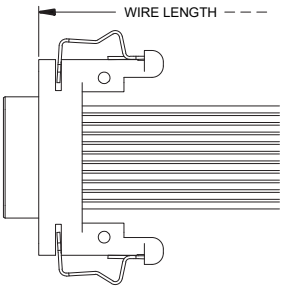

CONNECTORS

FOR CONNECTOR DIMENSIONS, PLEASE REFER TO PAGE 23 FOR LATCH SPRINGS CONNECTORS
& TO PAGE 24 FOR LATCH-POSTS CONNECTORS.

SUMMARY OF CHARACTERISTICS

ELECTRICAL & MECHANICAL PERFORMANCE	
CURRENT RATING	3 A max.
CONTACT RESISTANCE	8 mΩ max.
INSULATION RESISTANCE	5000 MΩ min. @ 500 VDC
DIELECTRIC WITHSTANDING VOLTAGE	Sea level: 600 VDC
	Altitude 21 km: 150 VDC
CONTACT ENGAGING FORCE	170 g max.
CONTACT SEPARATING FORCE	14 g min.
CONTACT RETENTION	2.26 kg (5 lbs)
DURABILITY	500 mating cycles min.
VIBRATION	20g's – No discontinuity > 1 µs
SHOCK	50g's – No discontinuity > 1 µs

MATERIAL & FINISH	
SHELL	Aluminium alloy 6061 with electroless nickel
MOULDED INSULATOR	Liquid Crystal Polymer (LCP)
INTERFACIAL SEAL	Fluorosilicone rubber
PIN CONTACT	Copper and beryllium copper, gold over nickel plating
SOCKET CONTACT	Copper alloy, gold over nickel plating
ENCAPSULANT	Epoxy resin
LATCH SPRINGS	Beryllium copper with nickel plating
LATCH-POSTS / HARDWARE	300 series stainless steel, passivated

©2018, AXON'CABLE - RELEASED SEPTEMBER 2025/C - www.axon-cable.com

CUSTOM DESIGNED CONNECTORS

In addition to the standard range of D-Click® connectors and assemblies, AXON' is able to develop custom solutions tailored to your needs, all based on D-Click® & twist pin contact technology.

Built on years of customising Micro-D connectors, AXON' has considerable experience in a range of technologies aimed at providing enhanced properties to metal shell connectors, such as hermeticity, rendering the entire connector non-magnetic, or making it suitable for use in space.
AXON' is the sole manufacturer in Europe to have fully integrated in-house the design and the manufacture of the Micro-D & D-Click® systems, including:
- Twist pins, shells, inserts and interfacial seals.
- Custom designed conductors, wires and cables.
- Complex assembly processes including optimised EMC shielding, branch braiding and overmoulding.

This high level of vertical integration enables AXON' to offer complete solutions which meet the demanding requirements of the aeronautics, space, military, industrial and off-shore markets.

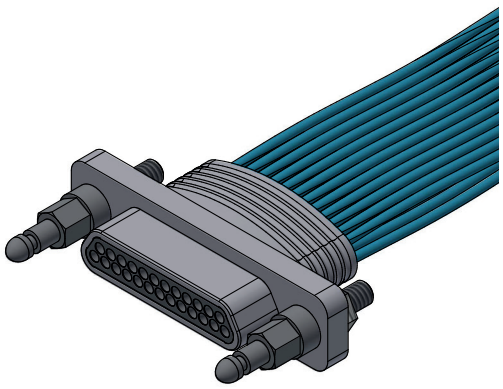

▲ CUSTOM ALL-IN-ONE CONNECTOR AND SHIELDED BACKSHELL DESIGN, FITTED WITH D-CLICK® LATCH-POSTS

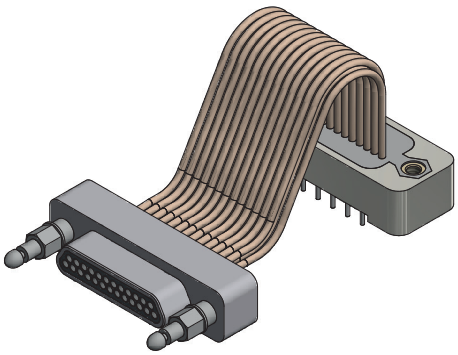

▲ REAR PANEL-MOUNT CONNECTOR WITH BLIND TAPPED HOLES AND PANEL-MOUNTING D-CLICK® LATCH-POSTS, LINKED TO A CUSTOM PCB HEADER

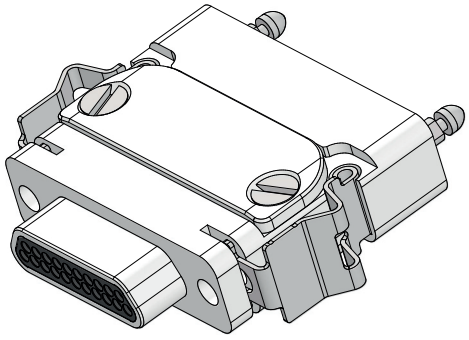

▲ CUSTOM D-CLICK® ONE-PIECE SAVER, EMI OPTIMISED

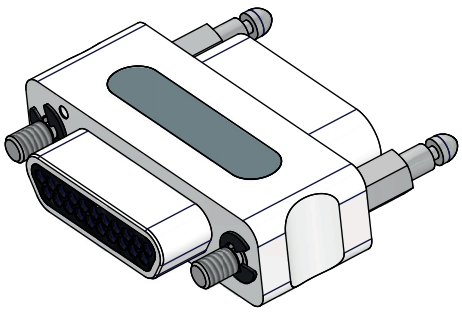

▲ ONE-PIECE SAVER, TRANSITION FROM D-CLICK® TO THREADED HARDWARE, MANY COMBINATIONS POSSIBLE

AXON' CABLE D-Click® connectors

Micro-D D-Click® connectors for space applications

General characteristics - 54
Reach & RoHS compliance - 55
ESCC Micro-D D-Click® Pigtail connectors - 56
ESCC Micro-D D-Click® PCB connectors - 59
ESCC Micro-D D-Click® Jumper links - 72
Custom designed connectors - 74

©2018, AXON'CABLE - RELEASED SEPTEMBER 2025/C - www.axon-cable.com

GENERAL CHARACTERISTICS

per ESCC 3401 091

Based on its Micro-D range, AXON's D-Click® connector range is designed for quick mating & de-mating. The innovative latching hardware allows rapid, reliable and secure connections with no tooling required. The Micro-D D-Click® range, which is covered by the ESCC 3401 091 standard, is ideally suited to equipment and applications where weight, miniaturisation and long term performance are required. It is available in 7 contact arrangements (9 to 51 contacts) for rectangular Micro-D connectors.

Electrical & mechanical characteristics

CHARACTERISTICS	SPECIFICATION	TEST METHOD
CURRENT RATING	2.5 A max. for AWG26 & uninsulated wires* 1.5 A max. for AWG28 wires*	
CONTACT RESISTANCE	5 mΩ @ current rating 6 mΩ @ low level current	Para 9.1.1.3 OF ESCC 3401
INSULATION RESISTANCE	5000 MΩ min. @ 500 VDC	Para 9.1.1.1 OF ESCC 3401
DIELECTRIC WITHSTANDING VOLTAGE	600 VRMS / 2 mA (leakage current)	Para 9.1.1.2 OF ESCC 3401
WORKING VOLTAGE - SEA LEVEL 0 m - ALTITUDE 33 km	 150 VRMS 100 VRMS	Para 9.13.5 OF ESCC 3401
CONTACT ENGAGING AND SEPARATION FORCE	1.667 N max. 0.137 N max.	Para 4.3.9 OF ESCC 3401/091
CONNECTOR MATING AND DE-MATING FORCE	Mating: 25 N (9 ways) to 142 N (51 ways) max. De-mating: 1.3 N min. / 25 N max. (9 ways) to 7.1 N min. / 142 N max. (51 ways)	Para 9.20 OF ESCC 3401
CONTACT RETENTION	22.25 N for female contacts	Para 9.17 OF ESCC 3401
DURABILITY	500 mating cycles min.	Para 9.18 OF ESCC 3401
TEMPERATURE RANGE	-55°C / +125°C	
VIBRATION	20 g's - no discontinuity >1µs	Para 9.11 OF ESCC 3401
SHOCK	50 g's - no discontinuity >1µs	Para 9.12 OF ESCC 3401
SALT SPRAY	48 hours	Para 9.22 OF ESCC 3401

*: For a single contact. Please refer to derating rule of ESCC 3401/091.

Material & Finish

COMPONENT	MATERIAL	FINISH
MALE CONTACT (TWIST PIN)	COPPER AND BERYLLIUM COPPER	GOLD PLATING IN ACCORDANCE WITH ASTM-B488, TYPE II, CLASS 1 (1.27 µm (0.00005") MINI), CODE C OVER NICKEL UNDERPLATE IN ACCORDANCE WITH SAE-AMS-QQ-N-290 CLASS 2 (1.27 µm (0.00005") TO 3.81 µm (0.00015"))
FEMALE CONTACT	COPPER ALLOY	
METAL SHELL	ALUMINIUM ALLOY, TYPE 6061	ELECTROLESS NICKEL PLATING IN ACCORDANCE WITH SAE-AMS2404, CLASS 4, .0005 INCH MIN.
PLASTIC INSERT / PCB TRAY	LIQUID CRYSTAL POLYMER, 30% LOADED GLASS FIBRE POLYESTER, 94VO, IN ACCORDANCE WITH MIL-M-24519 (200°C)	
INTERFACIAL SEAL	FLUOROSILICONE RUBBER	HEAT-CURED TO MEET ECSS-Q-70-71 A OUTGASSING REQUIREMENTS
LATCH-POST / HARDWARE	STAINLESS STEEL, 300 SERIES	PASSIVATION IN ACCORDANCE WITH SAE-AMS-2700
LATCH SPRING	BERYLLIUM COPPER	ELECTROLESS NICKEL PLATING IN ACCORDANCE WITH SAE-AMS2404, CLASS 4, .00015 INCH MIN.
ENCAPSULANT	SPACE GRADE EPOXY RESIN	
INSULATED WIRE	- POLYIMIDE INSULATED WIRES IN ACCORDANCE WITH ESCC 3901/002 - PTFE INSULATED WIRES IN ACCORDANCE WITH ESCC 3901/013 - ETFE INSULATED SILVER PLATED COPPER IN ACCORDANCE WITH SAE-AS22759/33	
UNINSULATED WIRE	SOLID COPPER WIRES IN ACCORDANCE WITH QQ-W-343 TYPE 'S' GOLD PLATED ACCORDING TO MIL-G-45204, CLASS 2 GRADE C OR D	

©2018, AXON'CABLE - RELEASED SEPTEMBER 2025/C - www.axon-cable.com

REACH & RoHS COMPLIANCE

RoHS compliance

AXON' CABLE has been pro-actively implementing measures for many years to ensure compliance with the European Directive 2011/65/EU which came into force on 21st July 2011. The Directive prohibits the use of Hazardous Substances such as lead, mercury, hexavalent chromium, cadmium, bromine compounds (PBB and PBDE) and various phtalates. It relates to all components of products which are used in the manufacture of electrical and electronic equipment.

As a cable and connector manufacturer, AXON' has taken actions to ensure compliance with directive 2000/53/EC applicable since 21st October 2000.

COMPONENT SPECIFIC RoHS COMPLIANCE

COMPONENT	MATERIAL	FINISH	RoHS STATUS
PIN CONTACT (TWIST PIN)	COPPER + BERYLLIUM COPPER	GOLD	RoHS Compliant
SOCKET CONTACT	COPPER ALLOY	GOLD	RoHS Compliant
METAL SHELL	ALUMINIUM ALLOY TYPE 6061	ELECTROLESS NICKEL	RoHS Compliant
PLASTIC INSERT / PCB TRAY	LIQUID CRYSTAL POLYMER	N/A	RoHS Compliant
INTERFACIAL SEAL	FLUOROSILICONE RUBBER	N/A	RoHS Compliant
LATCH POST / HARDWARE	STAINLESS STEEL 300 SERIES	PASSIVATION	RoHS Compliant
LATCH SPRING	BERYLLIUM COPPER	ELECTROLESS NICKEL	RoHS Compliant
PCB TERMINATION	SOLID COPPER WIRE	GOLD	RoHS Compliant
ENCAPSULANT	EPOXY RESIN 150°C & 200°C VERSIONS	N/A	RoHS Compliant

Application of REACH

The new EU regulation on the Registration, Evaluation, Authorisation and restriction of Chemicals (REACH) came into force in June 2007. The regulation concerns the authorised use of chemicals. It requires manufacturers and importers to register substances and their use with the European Chemical Agency (ECHA).

AXON' CABLE is known as a "*downstream user*" with respect to the REACH regulation, and a manufacturer of "Articles". AXON' CABLE products are not intended to release any undesired substance under normal and reasonable operations of use.

To this day AXON' CABLE have not identified any component containing any SVHC in their product range.

©2018, AXON'CABLE - RELEASED SEPTEMBER 2025/C - www.axon-cable.com

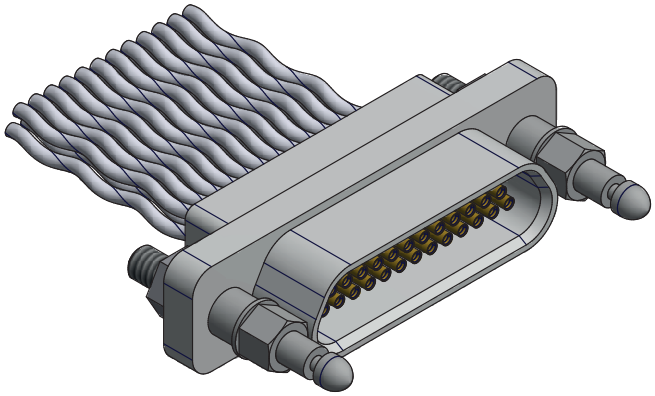

3401 091 02 B 25 S xxxxx Lxxx P5

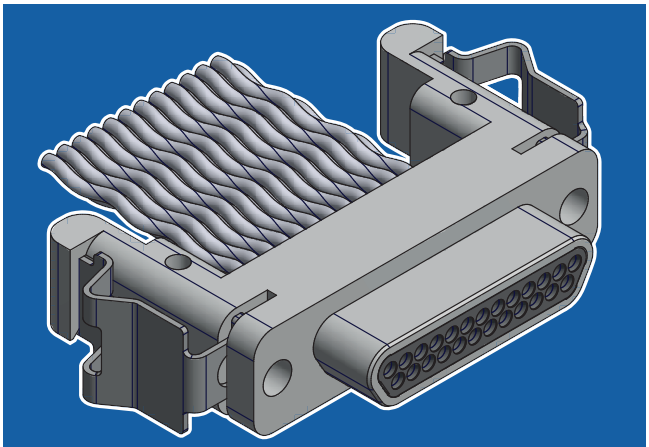

3401 091 01 B 25 P xxxxx Lxxx B

ESCC MICRO-D D-CLICK® PIGTAIL CONNECTORS

IDENTIFICATION CODE

3401 091	01	B	25	P	xxxxx	L050	B

FAMILY
3401 091: ESA approved Micro-D D-Click® AXON' Series.

VARIANT
01: Pigtail with Latch Springs.
02: Pigtail with Latch-posts.

TESTING LEVEL
B: Level B.

NUMBER OF CONTACTS
09, **15**, **21**, **25**, **31**, **37**, **51***.

GENDER
P: Male (pin contact).
S: Female (socket contact).

CABLES
00256: ESCC 3901 002 variant 56.
01203: ESCC 3901 012 variant 03.
01302: ESCC 3901 013 variant 02.
01804: ESCC 3901 018 variant 04.
01903: ESCC 3901 019 variant 03.
00261: ESCC 3901 002 variant 61.
01301: ESCC 3901 013 variant 01.
01803: ESCC 3901 018 variant 03.
01902: ESCC 3901 019 variant 02.
02402: ESCC 3901 024 variant 02.
02403: ESCC 3901 024 variant 03.

WIRE LENGTH (cm)
Lxxx: Wire length in centimeters (1 cm = 10 mm = 0.394").

L	5 ≤ L ≤ 10	10 < L ≤ 100	L >100
in cm (inches)	1.97 ≤ L ≤ 3.940	3.940 < L ≤ 39.40	L > 39.40
TOLERANCE	-0 / +0.5	-0 / +3	-0 / +5
in cm (inches)	-0 / +0.200	-0 / +1.180	-0 / +1.970

HARDWARE
B: D-Click® latch springs, (for variant 01 only).
P: D-Click® latch-posts (for variant 02 only).
Px (x: 1 to 5): D-Click® latch-posts, rear panel mount (for variant 02 only).
***x= 1**: 0.8 mm thickness* ***2**: 1.2 mm thickness* ***3**: 1.6 mm thickness*
***4**: 2.0 mm thickness* ***5**: 2.4 mm thickness*
See page 16 for D-Click® hardware.

**: 51 ways connectors are not part of 3401 091 to this date but are very likely to be included in the near future.*

DC TABS
Visual inspection & locking accessory.
Replace hardware code **B** with **S** for DC Tabs equipped connectors.
See page 18 for more details.

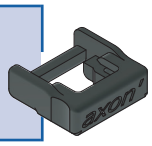

CONNECTORS ARE SUPPLIED WITH ANTI-STATIC PROTECTIVE DUST CAPS

©2018, AXON'CABLE - RELEASED SEPTEMBER 2025/C - www.axon-cable.com

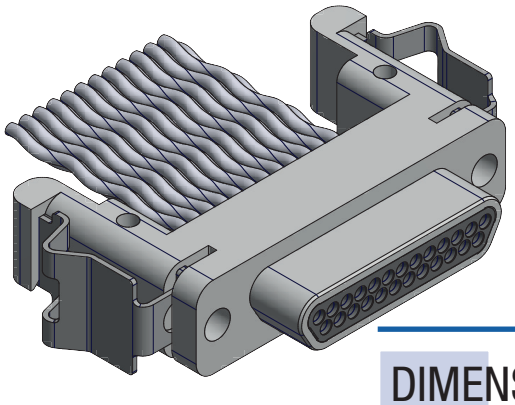

PIGTAIL
WITH LATCH SPRINGS (VAR. 01)

DIMENSIONS

Dimensions are in millimetres (inches).

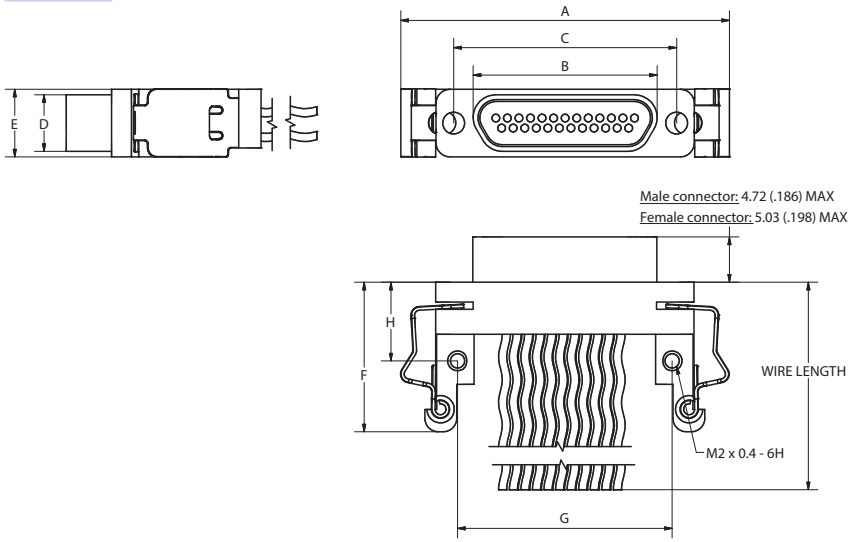

	A max.	B max.		C ± 0.13 (±.005)	D max.		E max.	F max.	G ± 0.13 (±.005)	H ± 0.13 (±.005)
		Male	Female		Male	Female				
9 P / 9 S	26.34 1.037	8.48 .334	10.16 .400	14.35 .565	4.69 .185	6.35 .250	7.82 .308	16.73 .569	13.43 .529	8.67 .341
15 P / 15 S	30.15 1.187	12.29 .484	14.00 .551	18.16 .715	4.69 .185	6.35 .250	7.82 .308	16.73 .569	17.24 .679	8.67 .341
21 P / 21 S	33.96 1.337	16.10 .634	17.81 .701	21.97 .865	4.69 .185	6.35 .250	7.82 .308	16.73 .569	21.05 .829	8.67 .341
25 P / 25 S	36.50 1.437	18.64 .734	20.35 .801	24.51 .965	4.69 .185	6.35 .250	7.82 .308	16.73 .569	23.59 .929	8.67 .341
31 P / 31 S	40.27 1.585	22.45 .884	24.16 .951	28.32 1.115	4.69 .185	6.35 .250	7.82 .308	16.73 .569	27.36 1.077	8.67 .341
37 P / 37 S	44.12 1.737	26.26 1.034	27.96 1.101	32.13 1.265	4.69 .185	6.35 .250	7.82 .308	16.73 .569	31.21 1.229	8.67 .341
51 P / 51 S	42.85 1.687	24.99 .984	26.70 1.051	30.86 1.215	5.79 .228	7.44 .293	8.91 .351	16.73 .569	29.94 1.179	8.67 .341

SUMMARY OF CHARACTERISTICS

ELECTRICAL & MECHANICAL PERFORMANCE	
CURRENT RATING	2.5 A max.
CONTACT RESISTANCE	5 mΩ max.
INSULATION RESISTANCE	5000 MΩ min. @ 500 VDC
DIELECTRIC WITHSTANDING VOLTAGE	Sea level: 150 VRMS
	Altitude 33 km: 100 VRMS
CONTACT ENGAGING FORCE	1.667 N max.
CONTACT SEPARATING FORCE	0.137 N min.
CONTACT RETENTION	22.25 N
DURABILITY	500 mating cycles min.
VIBRATION	20g's – No discontinuity > 1 µs
SHOCK	50g's – No discontinuity > 1 µs

MATERIAL & FINISH	
SHELL	Aluminium alloy 6061 with electroless nickel
MOULDED INSULATOR	Liquid Crystal Polymer (LCP)
INTERFACIAL SEAL	Fluorosilicone rubber
PIN CONTACT	Copper and beryllium copper, gold over nickel plating
SOCKET CONTACT	Copper alloy, gold over nickel plating
ENCAPSULANT	Epoxy resin
LATCH SPRINGS	Beryllium copper with nickel plating

©2018, AXON'CABLE - RELEASED SEPTEMBER 2025/C - www.axon-cable.com

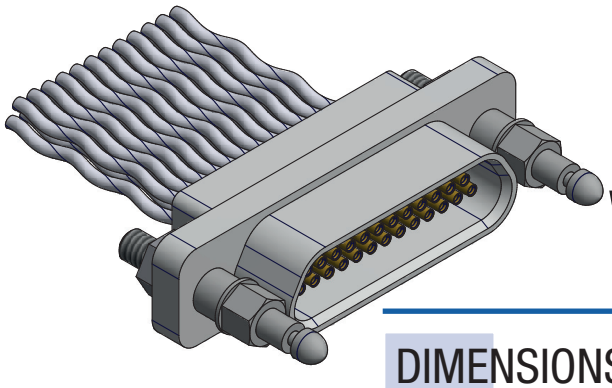

PIGTAIL
WITH LATCH-POSTS (VAR. 02)

DIMENSIONS

Dimensions are in millimetres (inches).

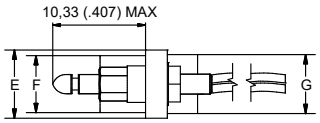

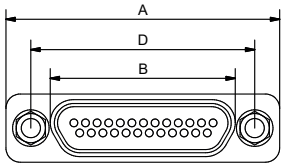

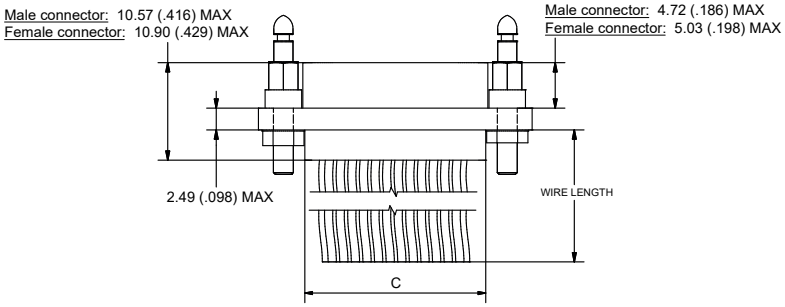

	A ± 0.25 (±.010)	B max.		C -0.46/+0.25 (-.018/+.010)	D ± 0.13 (±.005)	E ± 0.25 (±.010)	F max.		G max.
		Male	Female				Male	Female	
9 P / 9 S	19.69 .775	8.48 .334	10.16 .400	9.91 .390	14.35 .565	7.57 .298	4.69 .185	6.35 .250	6.86 .270
15 P / 15 S	23.50 .925	12.29 .484	14.00 .551	13.72 .540	18.16 .715	7.57 .298	4.69 .185	6.35 .250	6.86 .270
21 P / 21 S	27.31 1.075	16.10 .634	17.81 .701	17.53 .690	21.97 .865	7.57 .298	4.69 .185	6.35 .250	6.86 .270
25 P / 25 S	29.85 1.740	18.64 .734	20.35 .801	20.07 .790	24.51 .965	7.57 .298	4.69 .185	6.35 .250	6.86 .270
31 P / 31 S	33.66 2.040	22.45 .884	24.16 .951	23.88 .940	28.32 1.115	7.57 .298	4.69 .185	6.35 .250	6.86 .270
37 P / 37 S	37.47 1.475	26.26 1.034	27.96 1.101	27.69 1.090	32.13 1.265	7.57 .298	4.69 .185	6.35 .250	6.86 .270
51 P / 51 S	36.20 1.425	24.99 .984	26.70 1.051	26.42 1.040	30.86 1.215	8.66 .341	5.79 .228	7.44 .293	7.87 .310

SUMMARY OF CHARACTERISTICS

ELECTRICAL & MECHANICAL PERFORMANCE	
CURRENT RATING	2.5 A max.
CONTACT RESISTANCE	5 mΩ max.
INSULATION RESISTANCE	5000 MΩ min. @ 500 VDC
DIELECTRIC WITHSTANDING VOLTAGE	Sea level: 150 VRMS
	Altitude 33 km: 100 VRMS
CONTACT ENGAGING FORCE	1.667 N max.
CONTACT SEPARATING FORCE	0.137 N min.
CONTACT RETENTION	22.25 N
DURABILITY	500 mating cycles min.
VIBRATION	20g's – No discontinuity > 1 µs
SHOCK	50g's – No discontinuity > 1 µs

MATERIAL & FINISH	
SHELL	Aluminium alloy 6061 with electroless nickel
MOULDED INSULATOR	Liquid Crystal Polymer (LCP)
INTERFACIAL SEAL	Fluorosilicone rubber
PIN CONTACT	Copper and beryllium copper, gold over nickel plating
SOCKET CONTACT	Copper alloy, gold over nickel plating
ENCAPSULANT	Epoxy resin
LATCH-POSTS / HARDWARE	300 series stainless steel, passivated

©2018, AXON'CABLE - RELEASED SEPTEMBER 2025/C - www.axon-cable.com

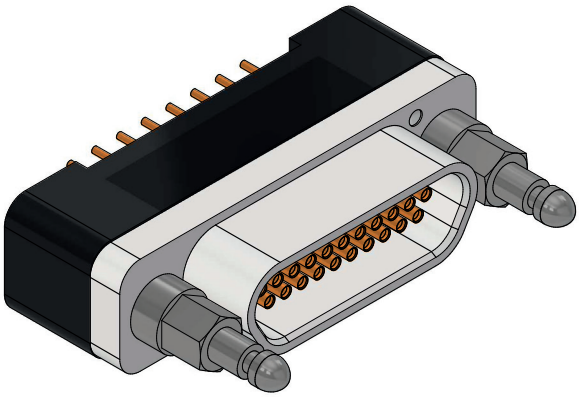

3401 091 05 B 21 S B W

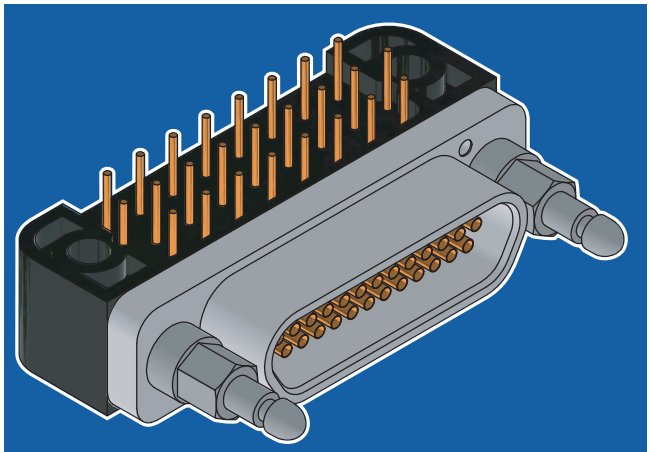

3401 091 03 B 25 S B P

ESCC MICRO-D D-CLICK® PCB CONNECTORS

IDENTIFICATION CODE

3401 091	04	B	25	S	A	P

FAMILY

3401 091: ESA approved Micro-D D-Click® AXON' series.

VARIANT

03: 0.100" Condensed Board Right Angle (CBR).
04: 0.100" Condensed Board Straight (BS).
05: 0.075" Condensed Board Straight Specific Layout (75SB).
06: 0.075" Condensed Board Right Angle (75RB).

TESTING LEVEL

B: Level B.

NUMBER OF CONTACTS

09, **15**, **21**, **25**, **31**, **37**, **51***.

CONNECTOR GENDER

P: Male (pin contacts).
S: Female (socket contacts).

TAIL LENGTH

A: 2.80 mm (0.110"). **B**: 3.80 mm (0.150").
C: 4.80 mm (0.190"). **D**: 6.35 mm (0.250").
Tolerance: ± 0.38 mm (0.015").
Other lengths available on request.

HARDWARE

P: D-Click® latch-posts.
W: D-Click® latch-posts & threaded mounting insert.
Px (x: 1 to 5): D-Click® latch-posts, rear panel mount.
Wx (x: 1 to 5): D-Click® latch-posts, rear panel mount & threaded mounting insert.
***x= 1**: 0.8 mm thickness* ***2**: 1.2 mm thickness* ***3**: 1.6 mm thickness*
***4**: 2.0 mm thickness* ***5**: 2.4 mm thickness*
See page 16 & 17 for D-Click® hardware.

**: 51 ways connectors are not part of 3401 091 to this date but are very likely to be included in the near future.*

CONNECTORS ARE SUPPLIED WITH ANTI-STATIC PROTECTIVE DUST CAPS

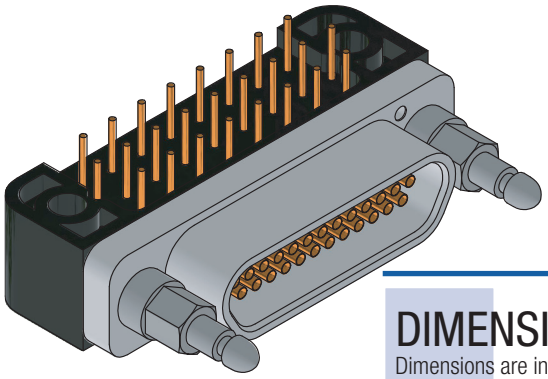

CBR TYPE
0.100" PITCH (VAR. 03)

DIMENSIONS
Dimensions are in millimetres (inches).

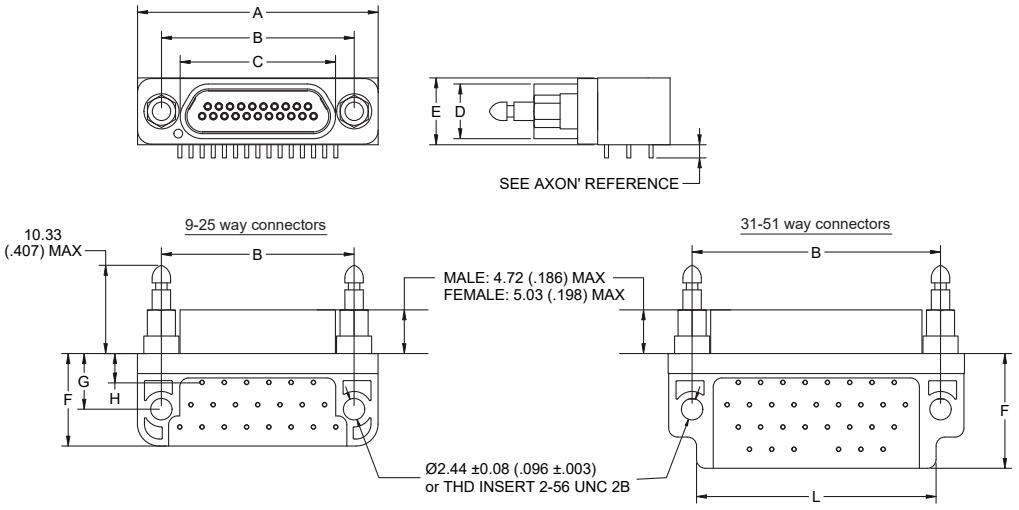

SEE CONTACT LAYOUT ON PCB PAGES 61 & 62

	A max.	B ± 0.13 (±.005)	C max.		D max.		E max.	F max.	G ± 0.25 (±.010)	H ± 0.25 (±.010)	L max.
			Male	Female	Male	Female					
9 P / 9 S	19.94 .785	14.35 .565	8.48 .334	10.16 .400	4.69 .185	6.35 .250	7.82 .308	10.80 .425	6.35 .250	5.84 .230	-
15 P / 15 S	23.75 .935	18.16 .715	12.29 .484	14.00 .551	4.69 .185	6.35 .250	7.82 .308	10.80 .425	6.35 .250	3.30 .130	-
21 P / 21 S	27.56 1.085	21.97 .865	16.10 .634	17.81 .701	4.69 .185	6.35 .250	7.82 .308	10.80 .425	6.35 .250	3.30 .130	-
25 P / 25 S	30.10 1.185	24.51 .965	18.64 .734	20.35 .801	4.69 .185	6.35 .250	7.82 .308	10.80 .425	6.35 .250	3.30 .130	-
31 P / 31 S	33.91 1.335	28.32 1.115	22.45 .884	24.16 .951	4.69 .185	6.35 .250	7.82 .308	13.34 .525	6.35 .250	3.30 .130	27.69 1.090
37 P / 37 S	37.72 1.485	32.13 1.265	26.26 1.034	27.96 1.101	4.69 .185	6.35 .250	7.82 .308	13.34 .525	6.35 .250	3.30 .130	30.23 1.190
51 P / 51 S	36.45 1.435	30.86 1.215	24.99 .984	26.70 1.051	5.79 .228	7.44 .293	8.92 .351	16.76 .660	7.62 .300	3.81 .150	31.24 1.230

SUMMARY OF CHARACTERISTICS

ELECTRICAL & MECHANICAL PERFORMANCE	
CURRENT RATING	2.5 A max.
CONTACT RESISTANCE	5 mΩ max.
INSULATION RESISTANCE	5000 MΩ min. @ 500 VDC
DIELECTRIC WITHSTANDING VOLTAGE	Sea level: 150 VRMS
	Altitude 33 km: 100 VRMS
CONTACT ENGAGING FORCE	1.667 N max.
CONTACT SEPARATING FORCE	0.137 N min.
CONTACT RETENTION	22.25 N
DURABILITY	500 mating cycles min.
VIBRATION	20g's – No discontinuity > 1 µs
SHOCK	50g's – No discontinuity > 1 µs

MATERIAL & FINISH	
SHELL	Aluminium alloy 6061 with electroless nickel
MOULDED INSULATOR	Liquid Crystal Polymer (LCP)
INTERFACIAL SEAL	Fluorosilicone rubber
PIN CONTACT	Copper and beryllium copper, gold over nickel plating
SOCKET CONTACT	Copper alloy, gold over nickel plating
ENCAPSULANT	Epoxy resin
MOULDED TRAY	Liquid Crystal Polymer (LCP)
LATCH-POSTS / HARDWARE	300 series stainless steel, passivated

©2018, AXON'CABLE - RELEASED SEPTEMBER 2025/C - www.axon-cable.com

PCB LAYOUT FOR CBR TYPE 0.100" PITCH - MALE CONNECTORS VARIANT 03

VIEW A

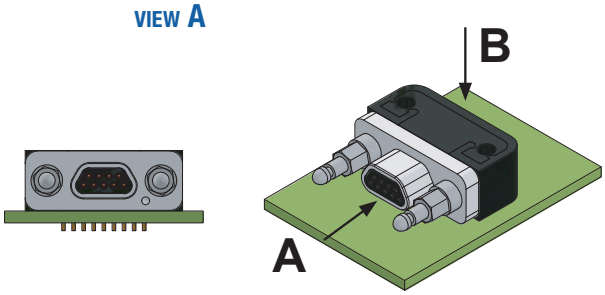

9 CONTACTS - VIEW B

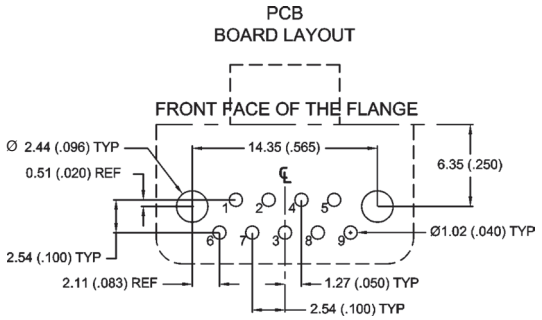

15 CONTACTS - VIEW B

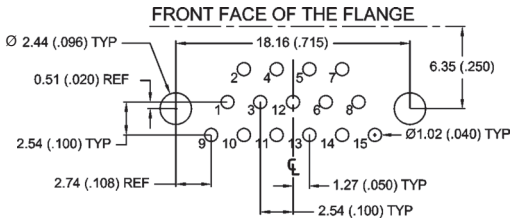

21 CONTACTS - VIEW B

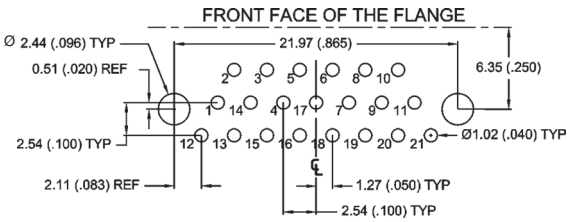

25 CONTACTS - VIEW B

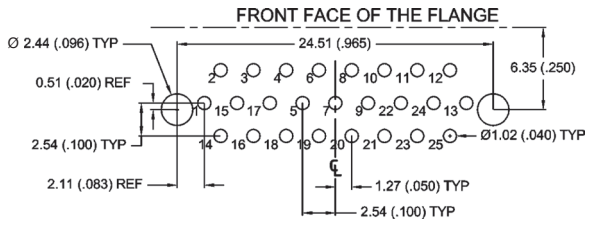

Given the very close position of pins 1 & 13 to the fixing hole pads, we recommend particular care if needing to use these pins considering the possible limits in terms of insulation distance.

31 CONTACTS - VIEW B

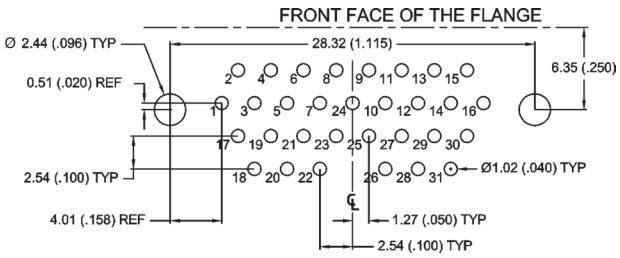

37 CONTACTS - VIEW B

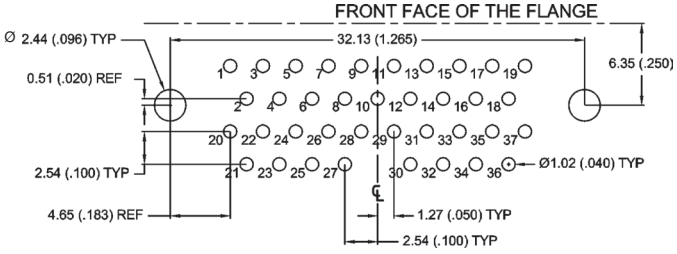

51 CONTACTS - VIEW B

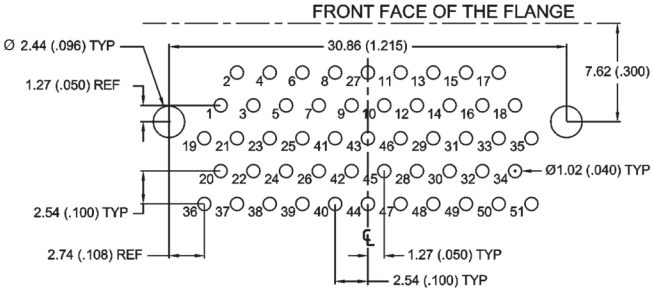

©2018, AXON'CABLE - RELEASED SEPTEMBER 2025/C - www.axon-cable.com

PCB LAYOUT FOR CBR TYPE
0.100" PITCH - FEMALE CONNECTORS
VARIANT 03

VIEW A

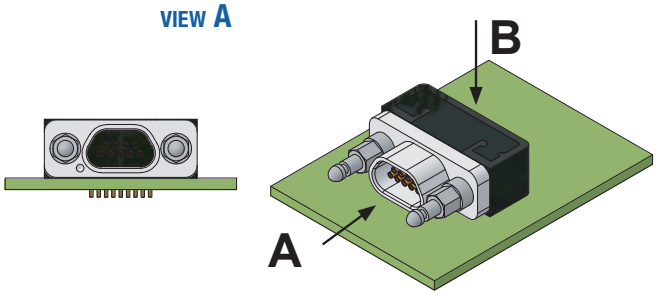

9 CONTACTS - VIEW B

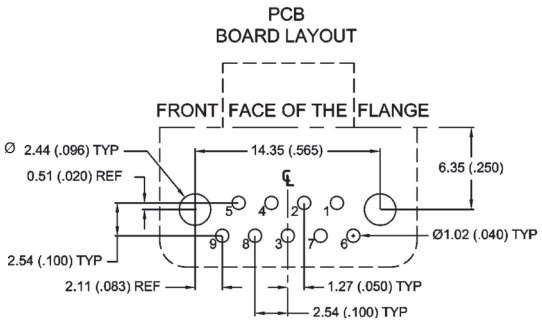

15 CONTACTS - VIEW B

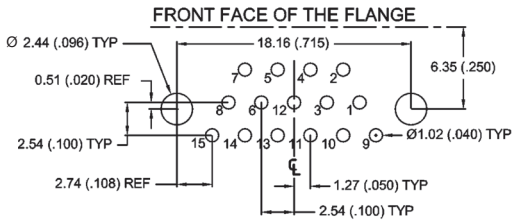

21 CONTACTS - VIEW B

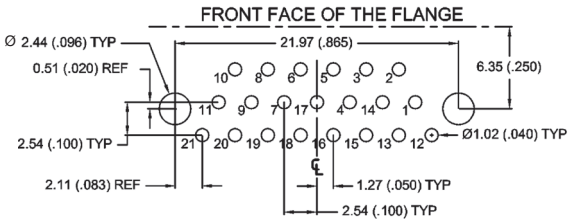

25 CONTACTS - VIEW B

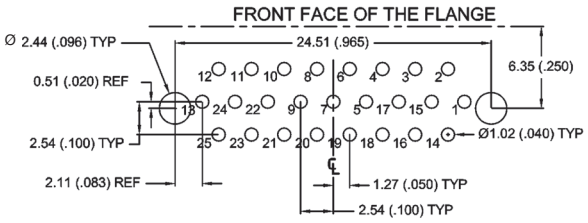

Given the very close position of pins 1 & 13 to the fixing hole pads, we recommend particular care if needing to use these pins considering the possible limits in terms of insulation distance.

31 CONTACTS - VIEW B

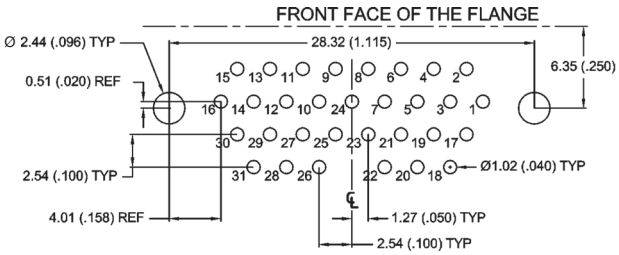

37 CONTACTS - VIEW B

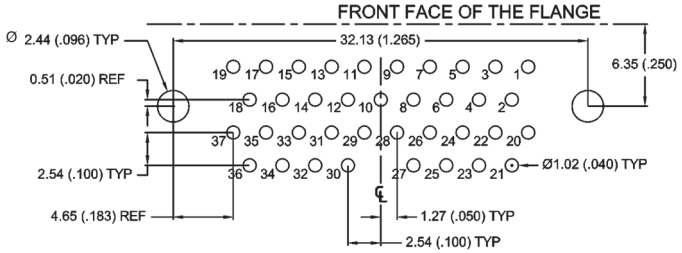

51 CONTACTS - VIEW B

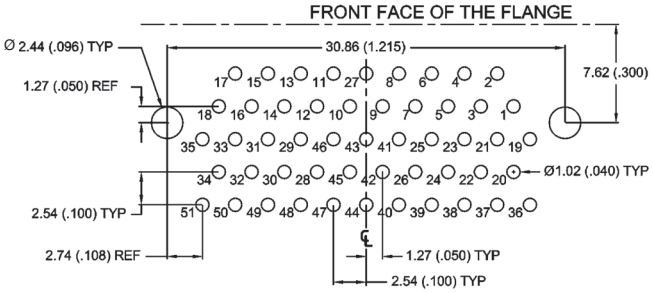

©2018, AXON'CABLE - RELEASED SEPTEMBER 2025/C - www.axon-cable.com

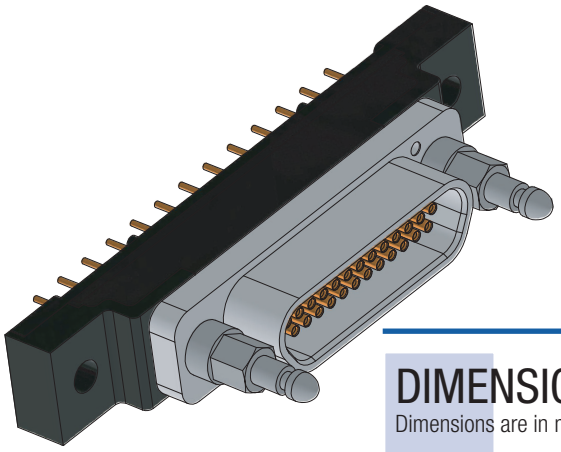

BS TYPE
0.100" PITCH (VAR. 04)

DIMENSIONS
Dimensions are in millimetres (inches).

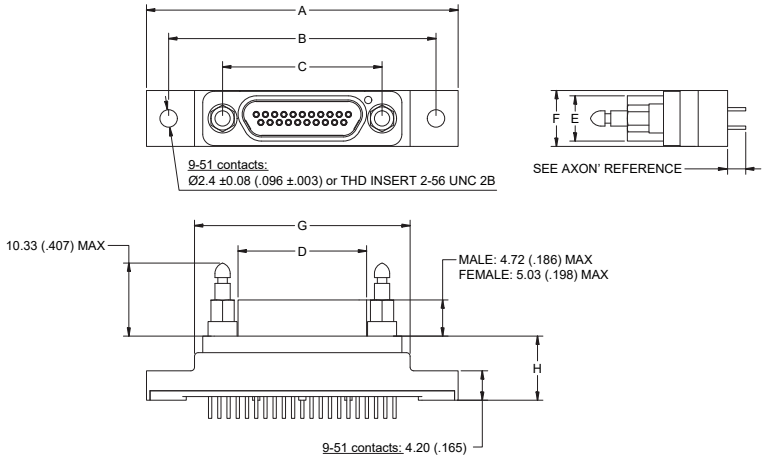

SEE CONTACT LAYOUT ON PCB PAGES 64 & 65

	A max.	B ± 0.18 (±.007)	C ± 0.13 (±.005)	D max.		E max.		F max.	G max.	H max.
				Male	Female	Male	Female			
9 P / 9 S	35.31 1.390	29.21 1.150	14.35 .565	8.48 .334	10.16 .400	4.69 .185	6.35 .250	7.82 .308	19.94 .785	9.02 .355
15 P / 15 S	35.31 1.390	29.21 1.150	18.16 .715	12.29 .484	14.00 .551	4.69 .185	6.35 .250	7.82 .308	24.00 .945	9.02 .355
21 P / 21 S	42.93 1.690	36.83 1.450	21.97 .865	16.10 .634	17.81 .701	4.69 .185	6.35 .250	7.82 .308	29.72 1.170	9.02 .355
25 P / 25 S	44.20 1.740	38.10 1.500	24.51 .965	18.64 .734	20.35 .801	4.69 .185	6.35 .250	7.82 .308	32.39 1.275	9.02 .355
31 P / 31 S	51.82 2.040	45.72 1.800	28.32 1.115	22.45 .884	24.16 .951	4.69 .185	6.35 .250	7.82 .308	40.01 1.575	9.02 .355
37 P / 37 S	59.44 2.340	53.34 2.100	32.13 1.265	26.26 1.034	27.96 1.101	4.69 .185	6.35 .250	7.82 .308	47.63 1.875	9.02 .355
51 P / 51 S	57.66 2.270	50.80 2.000	30.86 1.215	24.99 .984	26.70 1.051	5.79 .228	7.44 .293	8.92 .351	45.09 1.775	9.02 .355

SUMMARY OF CHARACTERISTICS

ELECTRICAL & MECHANICAL PERFORMANCE	
CURRENT RATING	2.5 A max.
CONTACT RESISTANCE	5 mΩ max.
INSULATION RESISTANCE	5000 MΩ min. @ 500 VDC
DIELECTRIC WITHSTANDING VOLTAGE	Sea level: 150 VRMS
	Altitude 33 km: 100 VRMS
CONTACT ENGAGING FORCE	1.667 N max.
CONTACT SEPARATING FORCE	0.137 N min.
CONTACT RETENTION	22.25 N
DURABILITY	500 mating cycles min.
VIBRATION	20g's – No discontinuity > 1 µs
SHOCK	50g's – No discontinuity > 1 µs

MATERIAL & FINISH	
SHELL	Aluminium alloy 6061 with electroless nickel
MOULDED INSULATOR	Liquid Crystal Polymer (LCP)
INTERFACIAL SEAL	Fluorosilicone rubber
PIN CONTACT	Copper and beryllium copper, gold over nickel plating
SOCKET CONTACT	Copper alloy, gold over nickel plating
ENCAPSULANT	Epoxy resin
MOULDED TRAY	Liquid Crystal Polymer (LCP)
LATCH-POSTS / HARDWARE	300 series stainless steel, passivated

©2018, AXON'CABLE - RELEASED SEPTEMBER 2025/C - www.axon-cable.com

PCB LAYOUT FOR BS TYPE 0.100" PITCH - MALE CONNECTORS VARIANT 04

VIEW A

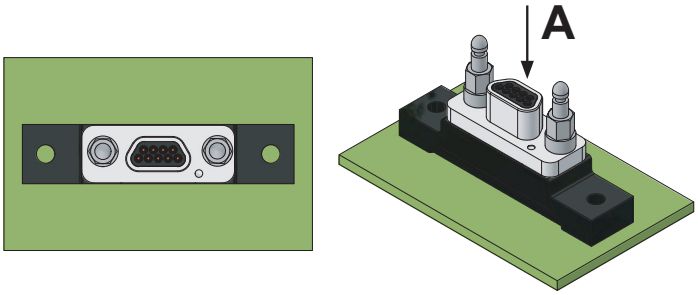

9 CONTACTS - VIEW A

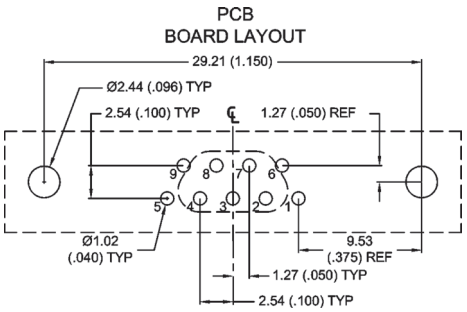

15 CONTACTS - VIEW A

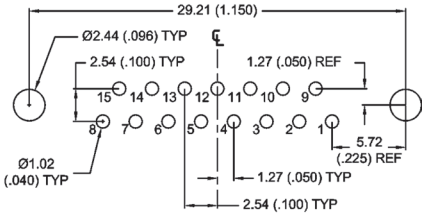

21 CONTACTS - VIEW A

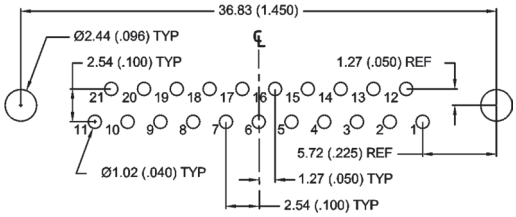

25 CONTACTS - VIEW A

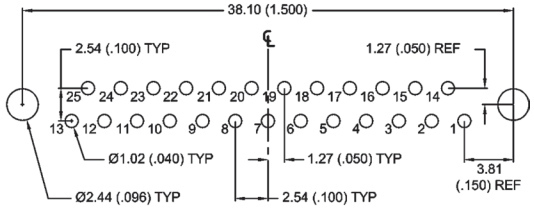

31 CONTACTS - VIEW A

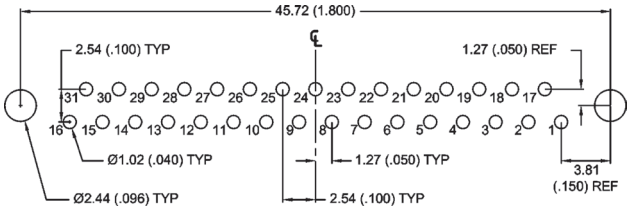

37 CONTACTS - VIEW A

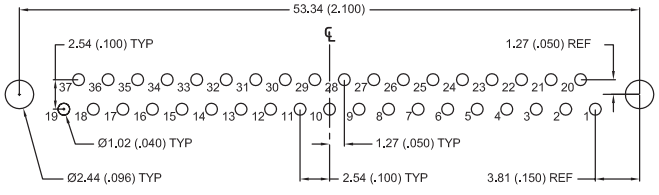

51 CONTACTS - VIEW A

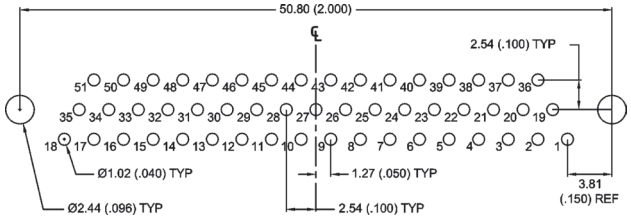

©2018, AXON'CABLE - RELEASED SEPTEMBER 2025/C - www.axon-cable.com

PCB LAYOUT FOR BS TYPE
0.100" PITCH - FEMALE CONNECTORS
VARIANT 04

VIEW A

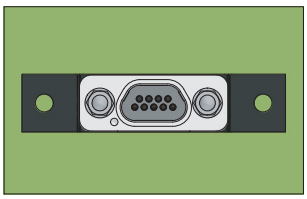

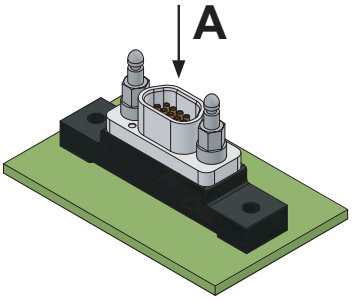

9 CONTACTS - VIEW A

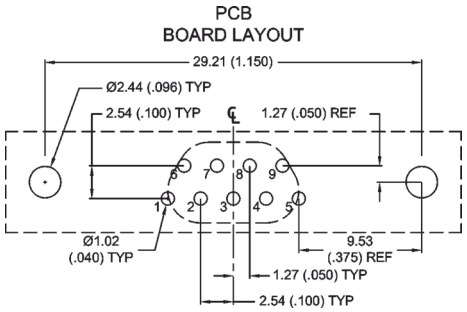

15 CONTACTS - VIEW A

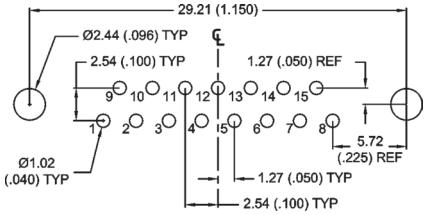

21 CONTACTS - VIEW A

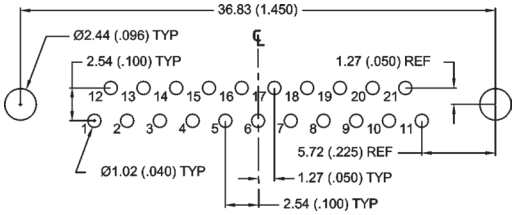

25 CONTACTS - VIEW A

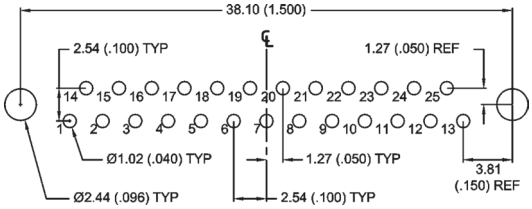

31 CONTACTS - VIEW A

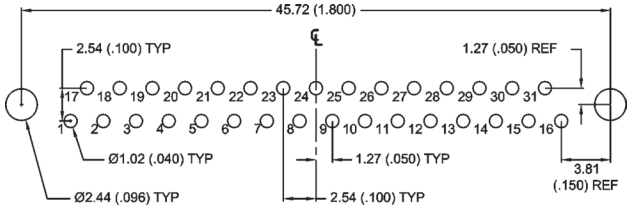

37 CONTACTS - VIEW A

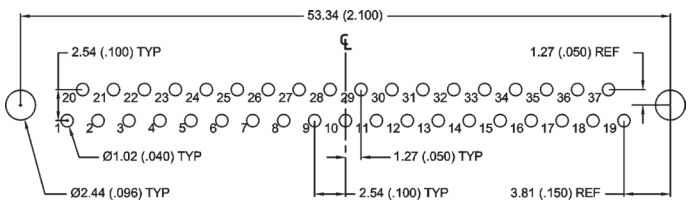

51 CONTACTS - VIEW A

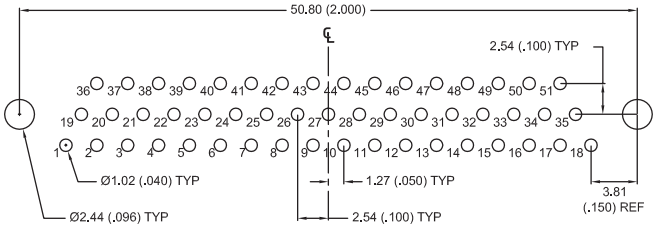

©2018, AXON'CABLE - RELEASED SEPTEMBER 2025/C - www.axon-cable.com

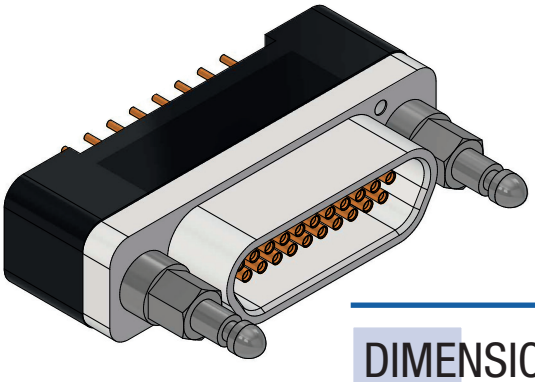

75SB TYPE
0.075" PITCH (VAR. 05)

DIMENSIONS

Dimensions are in millimetres (inches).

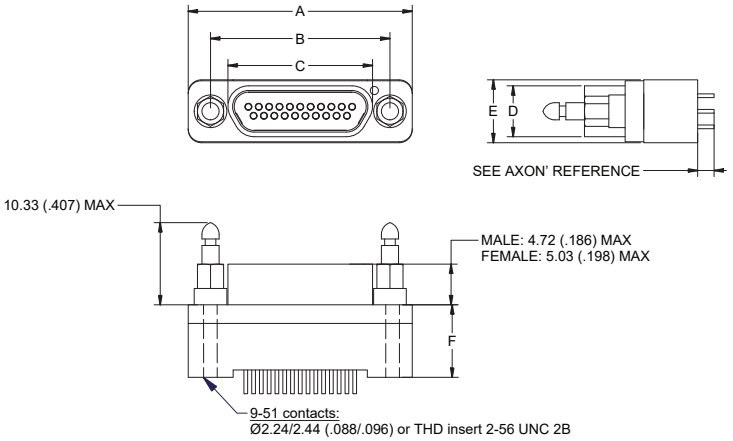

SEE CONTACT LAYOUT ON PCB PAGES 67 & 68

	A max.	B ± 0.13 (±.005)	C max.		D max.		E max.	F max.
			Male	Female	Male	Female		
9 P / 9 S	19.94 .785	14.35 .565	8.48 .334	10.16 .400	4.69 .185	6.35 .250	7.87 .310	9.02 .355
15 P / 15 S	23.75 .935	18.16 .715	12.29 .484	14.00 .551	4.69 .185	6.35 .250	7.87 .310	9.02 .355
21 P / 21 S	27.56 1.085	21.97 .865	16.10 .634	17.81 .701	4.69 .185	6.35 .250	7.87 .310	9.02 .355
25 P / 25 S	30.10 1.185	24.51 .965	18.64 .734	20.35 .801	4.69 .185	6.35 .250	7.87 .310	9.02 .355
31 P / 31 S	33.91 1.335	28.32 1.115	22.45 .884	24.16 .951	4.69 .185	6.35 .250	7.87 .310	9.02 .355
37 P / 37 S	37.72 1.485	32.13 1.265	26.26 1.034	27.96 1.101	4.69 .185	6.35 .250	7.87 .310	9.02 .355
51 P / 51 S	36.45 1.435	30.86 1.215	24.99 .984	26.70 1.051	5.79 .228	7.44 .293	10.16 .400	9.02 .355

SUMMARY OF CHARACTERISTICS

ELECTRICAL & MECHANICAL PERFORMANCE	
CURRENT RATING	2.5 A max.
CONTACT RESISTANCE	5 mΩ max.
INSULATION RESISTANCE	5000 MΩ min. @ 500 VDC
DIELECTRIC WITHSTANDING VOLTAGE	Sea level: 150 VRMS
	Altitude 33 km: 100 VRMS
CONTACT ENGAGING FORCE	1.667 N max.
CONTACT SEPARATING FORCE	0.137 N min.
CONTACT RETENTION	22.25 N
DURABILITY	500 mating cycles min.
VIBRATION	20g's – No discontinuity > 1 µs
SHOCK	50g's – No discontinuity > 1 µs

MATERIAL & FINISH	
SHELL	Aluminium alloy 6061 with electroless nickel
MOULDED INSULATOR	Liquid Crystal Polymer (LCP)
INTERFACIAL SEAL	Fluorosilicone rubber
PIN CONTACT	Copper and beryllium copper, gold over nickel plating
SOCKET CONTACT	Copper alloy, gold over nickel plating
ENCAPSULANT	Epoxy resin
MOULDED TRAY	Liquid Crystal Polymer (LCP)
LATCH-POSTS / HARDWARE	300 series stainless steel, passivated

©2018, AXON'CABLE - RELEASED SEPTEMBER 2025/C - www.axon-cable.com

PCB LAYOUT FOR BS TYPE - 0.075" PITCH - 75SB
SPECIFIC LAYOUT - MALE CONNECTORS
VARIANT 05

VIEW A

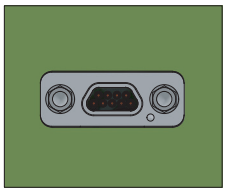

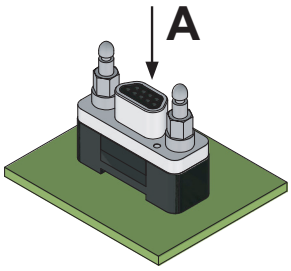

9 CONTACTS - VIEW A

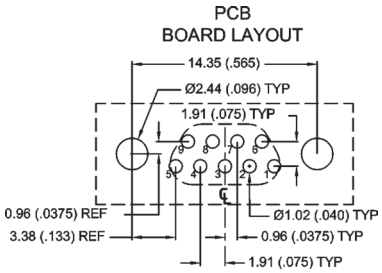

15 CONTACTS - VIEW A

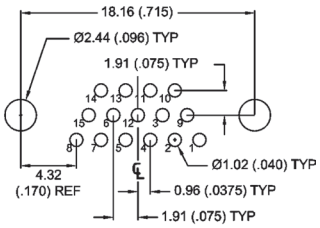

21 CONTACTS - VIEW A

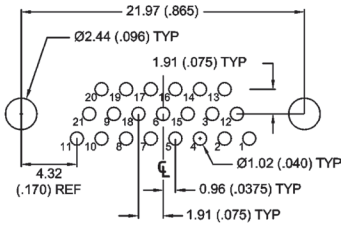

25 CONTACTS - VIEW A

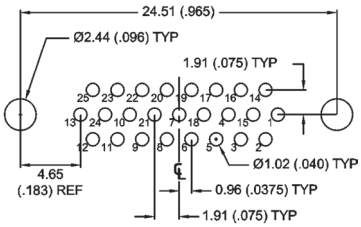

31 CONTACTS - VIEW A

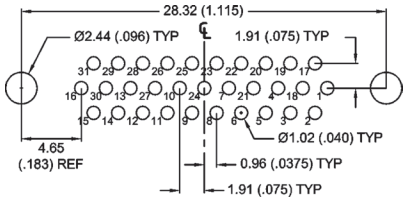

37 CONTACTS - VIEW A

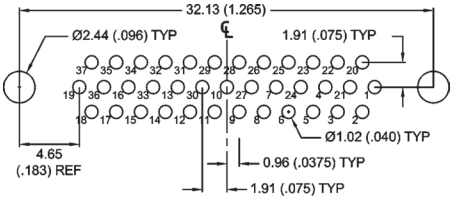

51 CONTACTS - VIEW A

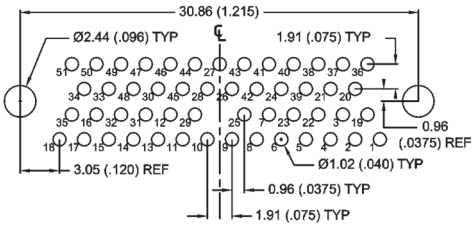

©2018, AXON'CABLE - RELEASED SEPTEMBER 2025/C - www.axon-cable.com

PCB LAYOUT FOR BS TYPE - 0.075" PITCH - 75SB
SPECIFIC LAYOUT - FEMALE CONNECTORS
VARIANT 05

VIEW A

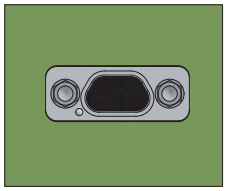

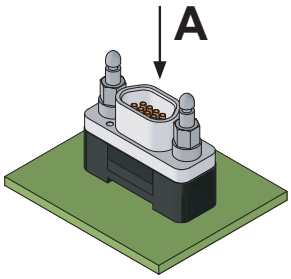

9 CONTACTS - VIEW A

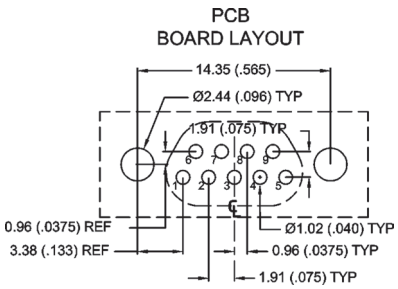

15 CONTACTS - VIEW A

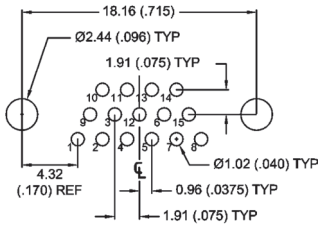

21 CONTACTS - VIEW A

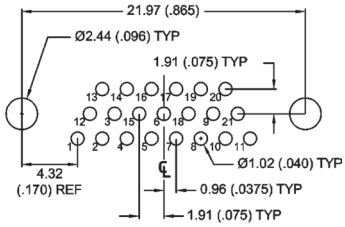

25 CONTACTS - VIEW A

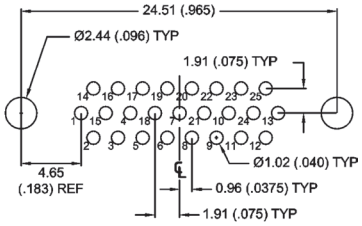

31 CONTACTS - VIEW A

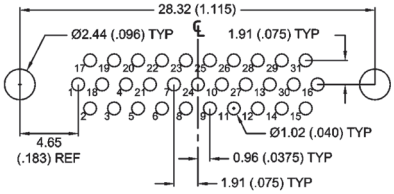

37 CONTACTS - VIEW A

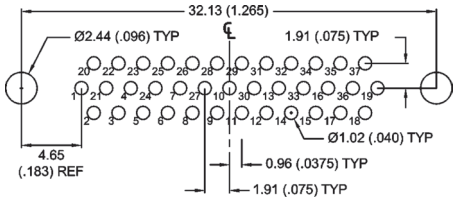

51 CONTACTS - VIEW A

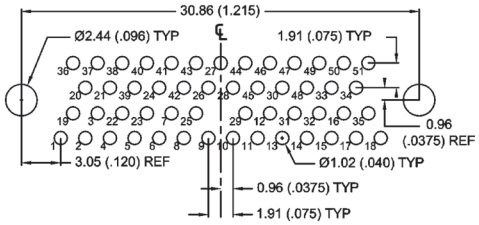

©2018, AXON'CABLE - RELEASED SEPTEMBER 2025/C - www.axon-cable.com

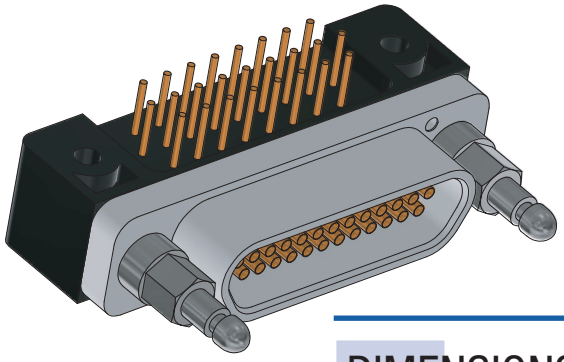

75RB TYPE
0.075" PITCH (VAR. 06)

DIMENSIONS
Dimensions are in millimetres (inches).

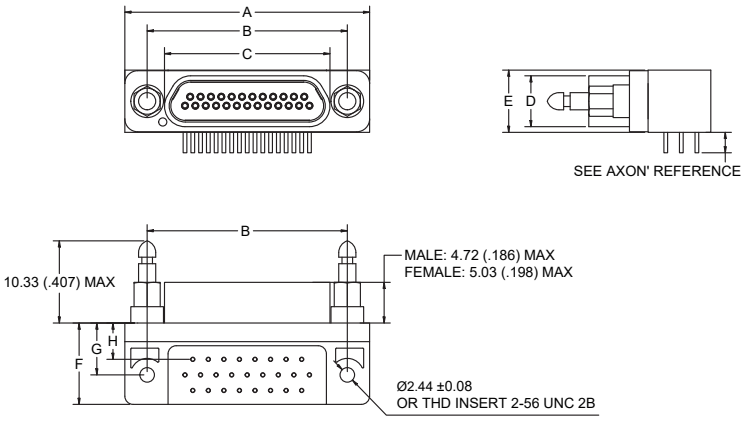

SEE CONTACT LAYOUT ON PCB PAGES 70 & 71

	A max.	B ± 0.13 (±.005)	C max.		D max.		E max.	F max.	G ± 0.25 (±.010)	H ± 0.25 (±.010)
			Male	Female	Male	Female				
9 P / 9 S	19.94 .785	14.35 .565	8.48 .334	10.16 .400	4.69 .185	6.35 .250	7.82 .308	10.16 .400	6.35 .250	5.40 .213
15 P / 15 S	23.75 .935	18.16 .715	12.29 .484	14.00 .551	4.69 .185	6.35 .250	7.82 .308	10.16 .400	6.35 .250	4.45 .175
21 P / 21 S	27.56 1.085	21.97 .865	16.10 .634	17.81 .701	4.69 .185	6.35 .250	7.82 .308	10.16 .400	6.35 .250	4.45 .175
25 P / 25 S	30.10 1.185	24.51 .965	18.64 .734	20.35 .801	4.69 .185	6.35 .250	7.82 .308	10.16 .400	6.35 .250	4.45 .175
31 P / 31 S	33.91 1.335	28.32 1.115	22.45 .884	24.16 .951	4.69 .185	6.35 .250	7.82 .308	10.16 .400	6.35 .250	4.45 .175
37 P / 37 S	37.72 1.485	32.13 1.265	26.26 1.034	27.96 1.101	4.69 .185	6.35 .250	7.82 .308	10.16 .400	6.35 .250	4.45 .175
51 P / 51 S	36.45 1.435	30.86 1.215	24.99 .984	26.70 1.051	5.79 .228	7.44 .293	8.92 .351	12.45 .490	7.62 .300	4.76 .188

SUMMARY OF CHARACTERISTICS

ELECTRICAL & MECHANICAL PERFORMANCE	
CURRENT RATING	2.5 A max.
CONTACT RESISTANCE	5 mΩ max.
INSULATION RESISTANCE	5000 MΩ min. @ 500 VDC
DIELECTRIC WITHSTANDING VOLTAGE	Sea level: 150 VRMS
	Altitude 33 km: 100 VRMS
CONTACT ENGAGING FORCE	1.667 N max.
CONTACT SEPARATING FORCE	0.137 N min.
CONTACT RETENTION	22.25 N
DURABILITY	500 mating cycles min.
VIBRATION	20g's – No discontinuity > 1 µs
SHOCK	50g's – No discontinuity > 1 µs

MATERIAL & FINISH	
SHELL	Aluminium alloy 6061 with electroless nickel
MOULDED INSULATOR	Liquid Crystal Polymer (LCP)
INTERFACIAL SEAL	Fluorosilicone rubber
PIN CONTACT	Copper and beryllium copper, gold over nickel plating
SOCKET CONTACT	Copper alloy, gold over nickel plating
ENCAPSULANT	Epoxy resin
MOULDED TRAY	Liquid Crystal Polymer (LCP)
LATCH-POSTS / HARDWARE	300 series stainless steel, passivated

©2018, AXON'CABLE - RELEASED SEPTEMBER 2025/C - www.axon-cable.com

PCB LAYOUT FOR CBR TYPE - 0.075" PITCH - 75RB MALE CONNECTORS VARIANT 06

VIEW A

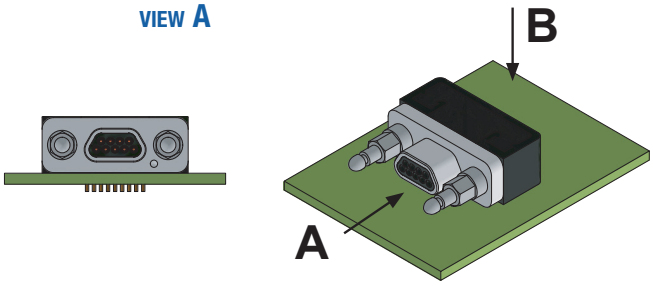

9 CONTACTS - VIEW B

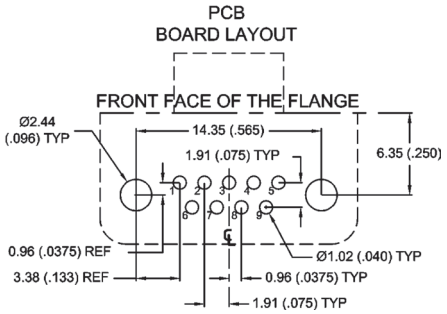

15 CONTACTS - VIEW B

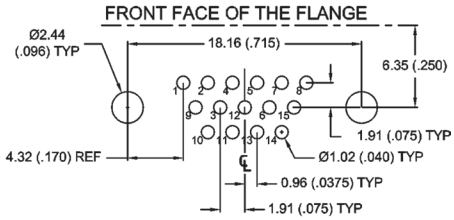

21 CONTACTS - VIEW B

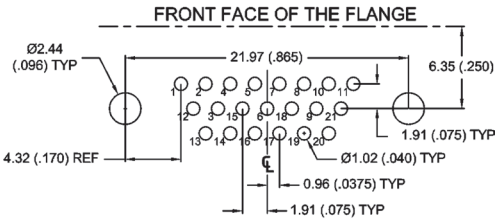

25 CONTACTS - VIEW B

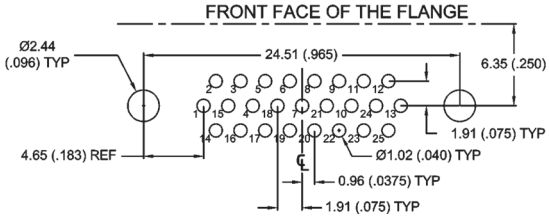

31 CONTACTS - VIEW B

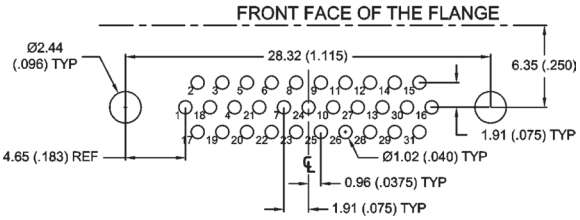

37 CONTACTS - VIEW B

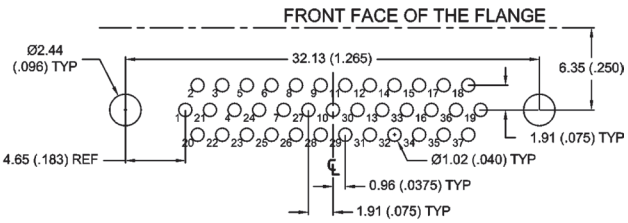

51 CONTACTS - VIEW B

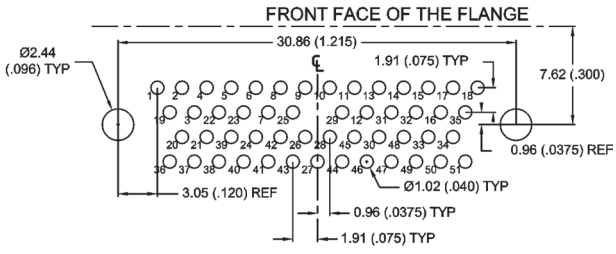

©2018, AXON'CABLE - RELEASED SEPTEMBER 2025/C - www.axon-cable.com

PCB LAYOUT FOR CBR TYPE - 0.075" PITCH - 75RB FEMALE CONNECTORS VARIANT 06

VIEW A

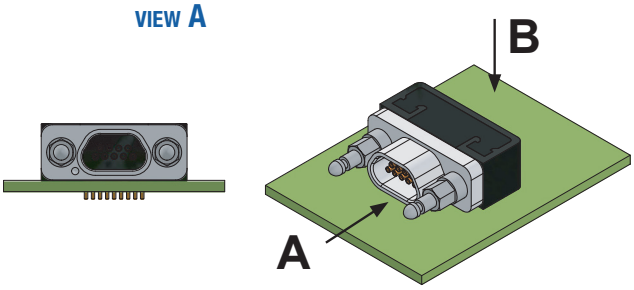

9 CONTACTS - VIEW B

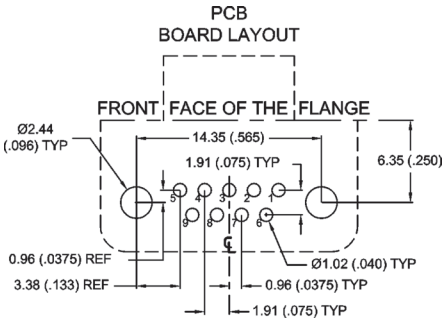

15 CONTACTS - VIEW B

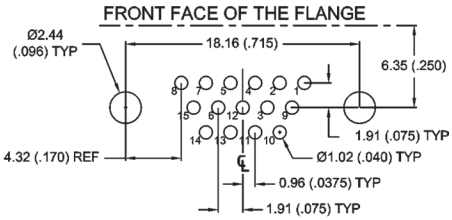

21 CONTACTS - VIEW B

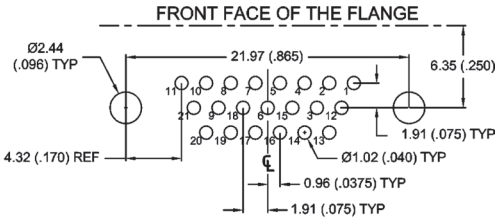

25 CONTACTS - VIEW B

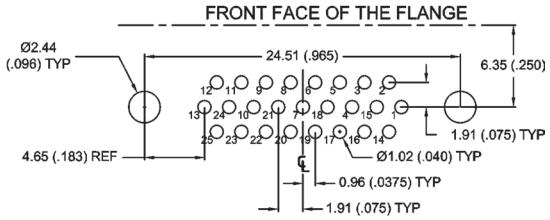

31 CONTACTS - VIEW B

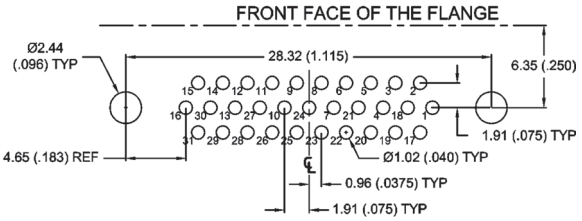

37 CONTACTS - VIEW B

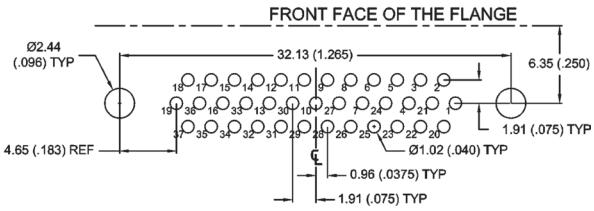

51 CONTACTS - VIEW B

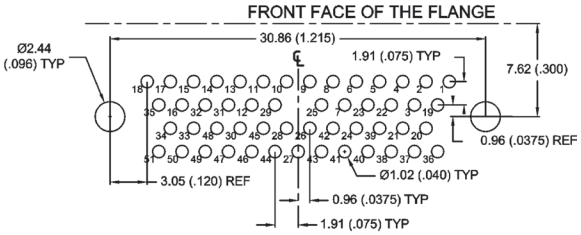

©2018, AXON'CABLE - RELEASED SEPTEMBER 2025/C - www.axon-cable.com

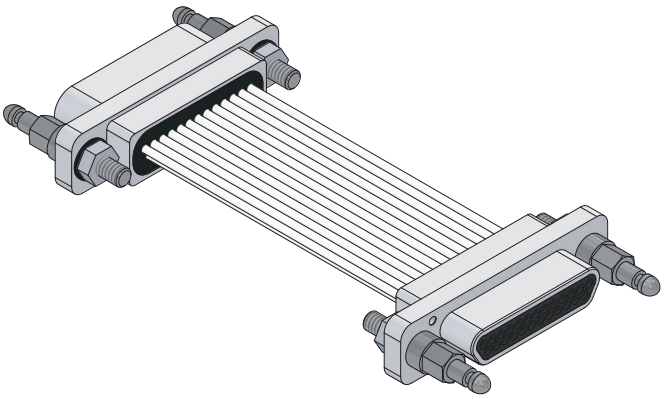

3401 091 09 B 21 PS D xxxxx Lxxx P P

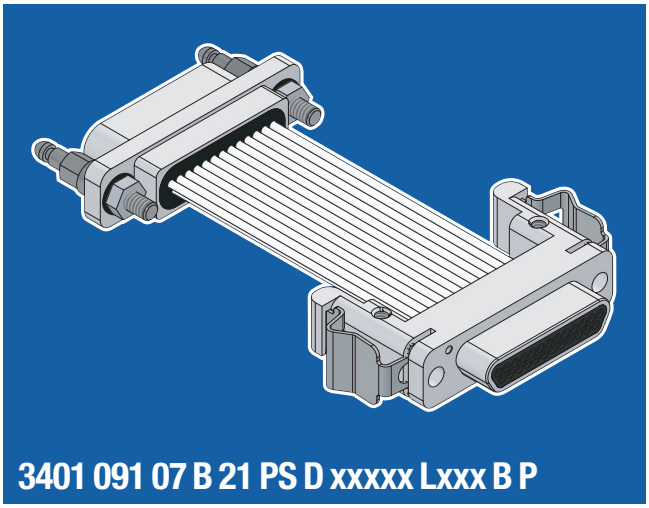

3401 091 07 B 21 PS D xxxxx Lxxx B P

ESCC MICRO-D D-CLICK® JUMPER LINKS

IDENTIFICATION CODE

3401 091	07	B	21	PS	D	xxxxx	L050	B	P

FAMILY
3401 091: ESA approved Micro-D D-Click® AXON' Series.

VARIANT
07: Jumper with latch springs & latch-posts.
08: Jumper with latch springs.
09: Jumper with latch-posts.

TESTING LEVEL
B: Level B.

NUMBER OF CONTACTS
09, **15**, **21**, **25**, **31**, **37**, **51***.

GENDER
PP: Male - Male. **PS**: Male - Female. **SS**: Female - Female.

WIRING
D: Direct. **I**: Indirect.

CABLES
00256: ESCC 3901 002 variant 56.
01203: ESCC 3901 012 variant 03.
01302: ESCC 3901 013 variant 02.
01804: ESCC 3901 018 variant 04.
01903: ESCC 3901 019 variant 03.
00261: ESCC 3901 002 variant 61.
01301: ESCC 3901 013 variant 01.
01803: ESCC 3901 018 variant 03.
01902: ESCC 3901 019 variant 02.
02402: ESCC 3901 024 variant 02.
02403: ESCC 3901 024 variant 03.

WIRE LENGTH (cm)
Wire length in centimeters (1 cm = 10 mm = 0.394").

L	5 ≤ L ≤ 10	10 < L ≤ 100	L >100
in cm (inches)	1.97 ≤ L ≤ 3.940	3.940 < L ≤ 39.40	L > 39.40
TOLERANCE	-0 / +0.5	-0 / +3	-0 / +5
in cm (inches)	-0 / +0.200	-0 / +1.180	-0 / +1.970

HARDWARE (CONNECTOR 1)
B: D-Click® latch springs.
P: D-Click® latch-posts.
Px (x: 1 to 5): D-Click® latch-posts, rear panel mount.

HARDWARE (CONNECTOR 2)
B: D-Click® latch springs.
P: D-Click® latch-posts.
Px (x: 1 to 5): D-Click® latch-posts, rear panel mount.
***x= 1**: 0.8 mm thickness **2**: 1.2 mm thickness **3**: 1.6 mm thickness*
***4**: 2.0 mm thickness **5**: 2.4 mm thickness*
See page 16 for D-Click® hardware.

Possible hardware combination
When **PS** gender is chosen, hardware 1 is prioritarily for male connectors

	Hardware 1	Hardware 2
Variant 07	**B**	**P** or **Px**
	P or **Px**	**B**
Variant 08	**B**	**B**
Variant 09	**P** or **Px**	**P** or **Px**

DC TABS
Visual inspection & locking accessory.
Replace hardware code **B** with **S** for DC Tabs equipped connectors.
See page 18 for more details.

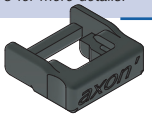

**: 51 ways connectors are not part of 3401 091 to this date but are very likely to be included in the near future.*

CONNECTORS ARE SUPPLIED WITH ANTI-STATIC PROTECTIVE DUST CAPS

©2018, AXON'CABLE - RELEASED SEPTEMBER 2025/C - www.axon-cable.com

JUMPER LINKS

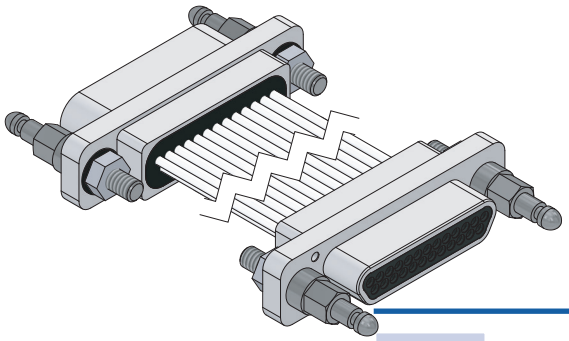

DIMENSIONS

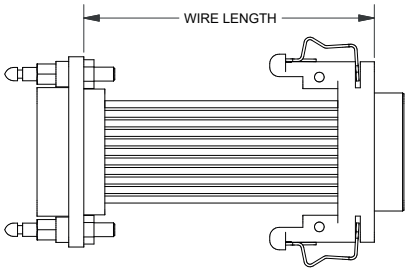

VARIANT 07

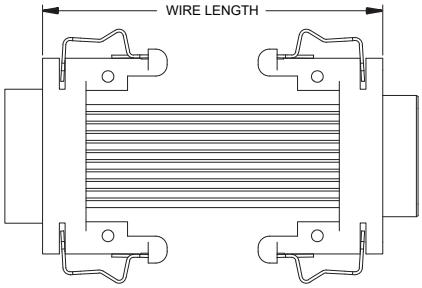

VARIANT 08

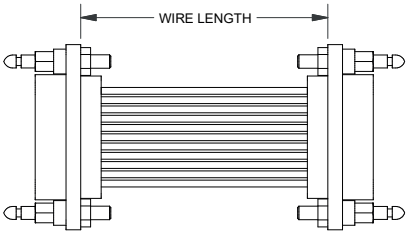

VARIANT 09

FOR CONNECTOR DIMENSIONS, PLEASE REFER TO PAGE 57 FOR LATCH SPRINGS CONNECTORS (CONNECTOR VARIANT 01)
& TO PAGE 58 FOR LATCH-POSTS CONNECTORS (CONNECTOR VARIANT 02).

SUMMARY OF CHARACTERISTICS

ELECTRICAL & MECHANICAL PERFORMANCE	
CURRENT RATING	2.5 A max.
CONTACT RESISTANCE	5 mΩ max.
INSULATION RESISTANCE	5000 MΩ min. @ 500 VDC
DIELECTRIC WITHSTANDING VOLTAGE	Sea level: 150 VRMS
	Altitude 33 km: 100 VRMS
CONTACT ENGAGING FORCE	1.667 N max.
CONTACT SEPARATING FORCE	0.137 N min.
CONTACT RETENTION	22.25 N
DURABILITY	500 mating cycles min.
VIBRATION	20g's – No discontinuity > 1 µs
SHOCK	50g's – No discontinuity > 1 µs

MATERIAL & FINISH	
SHELL	Aluminium alloy 6061 with electroless nickel
MOULDED INSULATOR	Liquid Crystal Polymer (LCP)
INTERFACIAL SEAL	Fluorosilicone rubber
PIN CONTACT	Copper and beryllium copper, gold over nickel plating
SOCKET CONTACT	Copper alloy, gold over nickel plating
ENCAPSULANT	Epoxy resin
LATCH SPRINGS	Beryllium copper with nickel plating
LATCH-POSTS / HARDWARE	300 series stainless steel, passivated

©2018, AXON'CABLE - RELEASED SEPTEMBER 2025/C - www.axon-cable.com

CUSTOM DESIGNED CONNECTORS

In addition to the standard range of D-Click® connectors and assemblies, AXON' is able to develop custom solutions tailored to your needs, all based on D-Click® & twist pin contact technology.

Built on years of customising Micro-D connectors, AXON' has considerable experience in a range of technologies aimed at providing enhanced properties to metal shell connectors, such as hermeticity, rendering the entire connector non-magnetic, or making it suitable for use in space.
AXON' is the sole manufacturer in Europe to have fully integrated in-house the design and the manufacture of the Micro-D & D-Click® systems, including:
- Twist pins, shells, inserts and interfacial seals.
- Custom designed conductors, wires and cables.
- Complex assembly processes including optimised EMC shielding, branch braiding and overmoulding.

This high level of vertical integration enables AXON' to offer complete solutions which meet the demanding requirements of the aeronautics, space, military, industrial and off-shore markets.

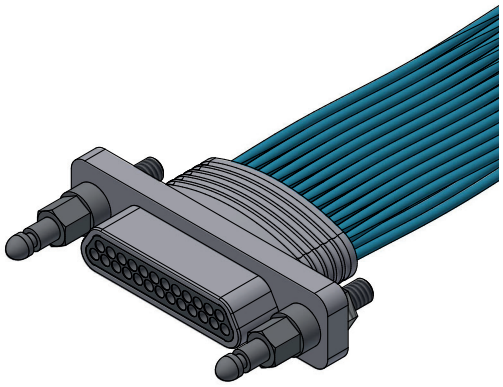

▲ CUSTOM ALL-IN-ONE CONNECTOR AND SHIELDED BACKSHELL DESIGN, FITTED WITH D-CLICK® LATCH-POSTS

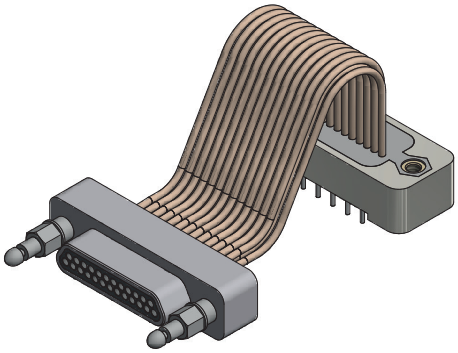

▲ REAR PANEL-MOUNT CONNECTOR WITH BLIND TAPPED HOLES AND PANEL-MOUNTING D-CLICK® LATCH-POSTS, LINKED TO A CUSTOM PCB HEADER

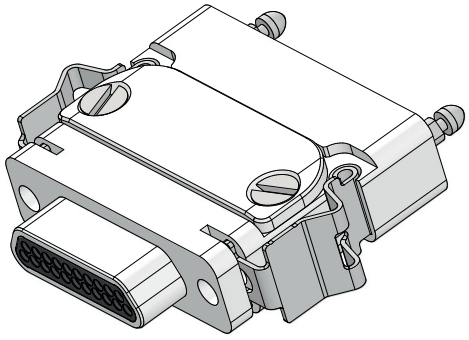

▲ CUSTOM D-CLICK® ONE-PIECE SAVER, EMI OPTIMISED

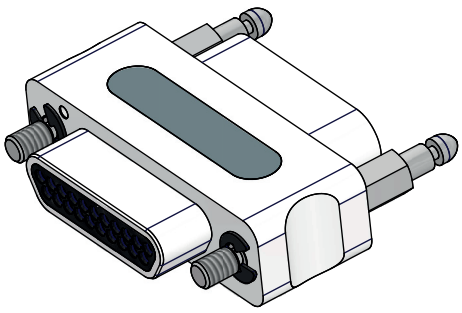

▲ ONE-PIECE SAVER, TRANSITION FROM D-CLICK® TO THREADED HARDWARE, MANY COMBINATIONS POSSIBLE

©2018, AXON'CABLE - RELEASED SEPTEMBER 2025/C - www.axon-cable.com

AXON' CABLE D-Click® connectors

Wires & accessories

Wires

Wire codes for D-Click® connectors - 76
Wire codes for D-Click® connectors for space applications - 77
Colour codes - 78

Accessories

Micro-D D-Click® backshells - 80
Axoclamp® EMI band termination - 84

©2018, AXON'CABLE - RELEASED SEPTEMBER 2025/C - www.axon-cable.com

WIRE CODES FOR D-CLICK® CONNECTOR

Nominal dimensions are used throughout this chapter.

Solid uninsulated wires

WIRE CODE	WEIGHT (g/m)	MATERIAL	AWG	CONSTRUCTION mm (inch)	Ø mm (inch)	AREA mm² (sq in)	RESISTANCE Ω/100m (Ω/ 1000 ft)
G	1.45	GOLD PLATED COPPER	25	1x0.455 1x.018	0.455 .018	0.163 .000252	11 33.5
T	1.81	TIN PLATED COPPER	24	1x0.510 1x.0201	0.510 .0201	0.205 .000317	9 27.4
T (FOR PCB)	1.81	GOLD PLATED COPPER AND TIN LEAD-FREE (97% TIN MAX.)	24	1x0.510 1x.0201	0.510 .0201	0.205 .000317	11 33.5
D (FOR PCB)	1.45	FLASH GOLD PLATED COPPER	25	1x0.455 1x.018	0.455 .018	0.163 .000252	11 33.5
X (FOR PCB)	1.81	GOLD PLATED COPPER DIPPED IN TIN-LEAD	24	1x0.510 1x.0201	0.510 .0201	0.205 .000317	9 27.4
U (FOR PCB)	1.81	GOLD PLATED COPPER	24	1x0.510 1x.0201	0.510 .0201	0.205 .000317	9 27.4

Insulated wires

WIRE CODE	WIRE DESIGNATION	WEIGHT g/m	CONDUCTOR						INSULATION		TEMPERATURE RATING	VOLTAGE RATING
			MATERIAL	AWG	CONSTRUCTION mm (inch)	Ø mm (inch)	AREA mm² (sq in)	RESISTANCE Ω/100m (Ω/ 1000 ft)	MATERIAL	Ø mm (inch)		
1	E 2607	2.70	SPC **	26	7x0.160 7x.0063	0.480 .0189	0.141 .000219	12.8 39.0	EXTRUDED PTFE	1.00 .039	-90°C/ +200°C	600 VAC
4	E 2619	3.00	SPC **	26	19x0.102 19x.0040	0.504 .020	0.154 .000239	12 36.6	EXTRUDED PTFE	1.00 .039	-90°C/ +200°C	600 VAC
6	E 2807	2.00	SPC **	28	7x0.127 7x.0050	0.381 .015	0.088 .000136	20.1 61.3	EXTRUDED PTFE	0.90 .035	-90°C/ +200°C	600 VAC
8	E 3007	1.50	SPC **	30	7x0.102 7x.0040	0.304 .012	0.057 .000088	31 94.5	EXTRUDED PTFE	0.80 .031	-90°C/ +200°C	600 VAC
A	E 2407	3.60	SPC **	24	7x0.203 7x.0080	0.609 .024	0.228 .000353	8 24.4	EXTRUDED PTFE	1.10 .043	-90°C/ +200°C	600 VAC
C	E 2419	4.10	SPC **	24	19x0.127 19x.0050	0.634 .025	0.239 .000370	7.6 23.2	EXTRUDED PTFE	1.15 .045	-90°C/ +200°C	600 VAC
F	E 2607*	2.70	SPC **	26	7x0.160 7x.0063	0.480 .0189	0.141 .000219	12.8 39.0	EXTRUDED PTFE	1.00 .039	-90°C/ +200°C	600 VAC

*: ONLY FOR COLOUR CODE V
**: SILVER PLATED COPPER

©2018, AXON'CABLE - RELEASED SEPTEMBER 2025/C - www.axon-cable.com

WIRE CODES FOR D-CLICK® FOR SPACE APPLICATIONS

Nominal dimensions are used throughout this chapter.

Solid uninsulated wires

CONDUCTOR TYPE	WEIGHT g/m	CONDUCTOR					
		MATERIAL	AWG	CONSTRUCTION mm (inch)	Ø mm (inch)	AREA mm² (sq in)	RESISTANCE Ω/100m (Ω/ 1000 ft)
GOLD PLATTED COPPER AWG25	1.45	GOLD PLATED COPPER	25	1x0.455 1x.018	0.455 .018	0.163 .000252	11 33.5

Insulated wires

WIRE CODE	WIRE DESIGNATION	MAX. WEIGHT g/m	CONDUCTOR						INSULATION		TEMPERATURE RATING	VOLTAGE RATING
			MATERIAL	AWG	CONSTRUCTION mm (inch)	Ø mm (inch)	AREA mm² (sq in)	MAX. RESIST. Ω/1km (Ω/1000 ft)	MATERIAL	MAX. Ø mm (inch)		
00256	ESCC 3901 002 56	1.93	SPCA	26	19x0.10 19x.0039	0.53 .020	0.15 .000232	148 45	POLYIMIDE LIGHT	0.78 .031	-100°C / +200°C	600 VAC
00261	ESCC 3901 002 61	1.23	SPCA	28	19x0.08 19x.0031	0.43 .017	0.10 .000155	242 74	POLYIMIDE LIGHT	0.68 .027	-100°C / +200°C	600 VAC
01203	ESCC 3901 012 03	2.11	SPCA	26	19x0.10 19x.0039	0.53 .020	0.15 .000232	149 45	CROSS-LINKED ETFE	0.86 .034	-100°C / +200°C	600 VAC
01301	ESCC 3901 013 01	1.80	SPCA	28	7x0.127 7x.0050	0.42 .017	0.089 .000138	215 66	PTFE & POLYIMIDE	0.82 .032	-100°C / +200°C	600 VAC
01302	ESCC 3901 013 02	2.30	SPCA	26	7x0.16 19x.0063	0.50 .020	0.14 .000217	146 45	PTFE & POLYIMIDE	0.89 .035	-100°C / +200°C	600 VAC
01803	ESCC 3901 018 03	1.81	SPCA	28	7x0.126 19x.0050	0.39 .015	0.089 .000138	239 73	CELLOFLON®, POLYIMIDE & PTFE	0.9 .035	-200°C / +200°C	600 VAC
01804	ESCC 3901 018 04	2.68	SPCA	26	7x0.160 7x.0063	0.49 .019	0.14 .000217	150 46	CELLOFLON®, POLYIMIDE & PTFE	1.03 .041	-200°C / +200°C	600 VAC
01902	ESCC 3901 019 02	1.4	SPCA	28	7x0.127 19x.0050	0.47 .018	0.09 .000139	253 77	CELLOFLON® & POLYIMIDE	0.87 .034	-200°C / +200°C	600 VAC
01903	ESCC 3901 019 03	1.9	SPCA	26	19x0.10 19x.0039	0.57 .022	0.15 .000232	157 48	CELLOFLON® & POLYIMIDE	0.96 .038	-200°C / +200°C	600 VAC
02402	ESCC 3901 024 02	1.7	SPCA	28	7x0.127 19x.0050	0.39 .015	0.09 .000139	253 77	ABRASION RESISTANT PTFE TAPE	0.85 0.033	-200°C / +200°C	600 VAC
02403	ESCC 3901 024 03	2.2	SPCA	26	19x0.100 19x.0039	0.47 .018	0.15 .000232	157 48	ABRASION RESISTANT PTFE TAPE	1.00 .039	-200°C / +200°C	600 VAC

SPCA = SILVER PLATED COPPER ALLOY

OTHER WIRE TYPES AVAILABLE ON REQUEST

©2018, AXON'CABLE - RELEASED SEPTEMBER 2025/C - www.axon-cable.com

COLOUR CODES

Colour codes F and L

All the wires have the same colour.
Available with all wire types.

COLOUR CODE	COLOUR
F	YELLOW
L	WHITE

OTHER COLOURS AVAILABLE ON REQUEST.

Colour code W

Also called 10 colour repeat (10 colours repeated in sequence) as per MIL-DTL-83513. Available with all wire types.

PIN NUMBER	MIL-STD-681 NUMBER	COLOUR
1	0	BLACK
2	1	BROWN
3	2	RED
4	3	ORANGE
5	4	YELLOW
6	5	GREEN
7	6	BLUE
8	7	VIOLET
9	8	GREY
10	9	WHITE
11	0	BLACK
12	1	BROWN
13	2	RED
14	3	ORANGE
15	4	YELLOW
16	5	GREEN
17	6	BLUE
18	7	VIOLET
19	8	GREY
20	9	WHITE
21	0	BLACK

©2018, AXON'CABLE - RELEASED SEPTEMBER 2025/C - www.axon-cable.com

Colour code V

Only available with 2607 AWG wires (Micro-D wire code F).

Colours and coloured stripes as per MIL-STD-681 system (except the appropriate colour code is the contact number minus 1).

CONTACT NUMBER	MIL-STD-681 NUMBER	BASE COLOUR	FIRST STRIPE	SECOND STRIPE
1	0	BLACK	-	-
2	1	BROWN	-	-
3	2	RED	-	-
4	3	ORANGE	-	-
5	4	YELLOW	-	-
6	5	GREEN	-	-
7	6	BLUE	-	-
8	7	VIOLET	-	-
9	8	GREY	-	-
10	9	WHITE	-	-
11	90	WHITE	BLACK	-
12	91	WHITE	BROWN	-
13	92	WHITE	RED	-
14	93	WHITE	ORANGE	-
15	94	WHITE	YELLOW	-
16	95	WHITE	GREEN	-
17	96	WHITE	BLUE	-
18	97	WHITE	VIOLET	-
19	98	WHITE	GREY	-
20	901	WHITE	BLACK	BROWN
21	902	WHITE	BLACK	RED
22	903	WHITE	BLACK	ORANGE
23	904	WHITE	BLACK	YELLOW
24	905	WHITE	BLACK	GREEN
25	906	WHITE	BLACK	BLUE
26	907	WHITE	BLACK	VIOLET
27	908	WHITE	BLACK	GREY
28	912	WHITE	BROWN	RED
29	913	WHITE	BROWN	ORANGE
30	914	WHITE	BROWN	YELLOW
31	915	WHITE	BROWN	GREEN
32	916	WHITE	BROWN	BLUE
33	917	WHITE	BROWN	VIOLET
34	918	WHITE	BROWN	GREY
35	923	WHITE	RED	ORANGE
36	924	WHITE	RED	YELLOW
37	925	WHITE	RED	GREEN
38	926	WHITE	RED	BLUE
39	927	WHITE	RED	VIOLET
40	928	WHITE	RED	GREY
41	934	WHITE	ORANGE	YELLOW
42	935	WHITE	ORANGE	GREEN
43	936	WHITE	ORANGE	BLUE
44	937	WHITE	ORANGE	VIOLET
45	938	WHITE	ORANGE	GREY
46	945	WHITE	YELLOW	GREEN
47	946	WHITE	YELLOW	BLUE
48	947	WHITE	YELLOW	VIOLET
49	948	WHITE	YELLOW	GREY
50	956	WHITE	GREEN	BLUE
51	957	WHITE	GREEN	VIOLET

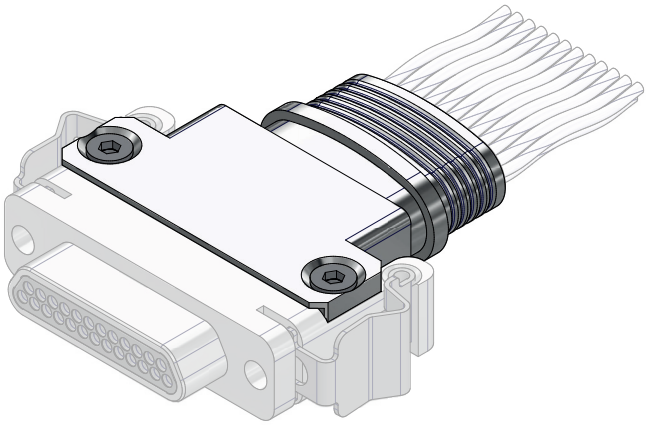

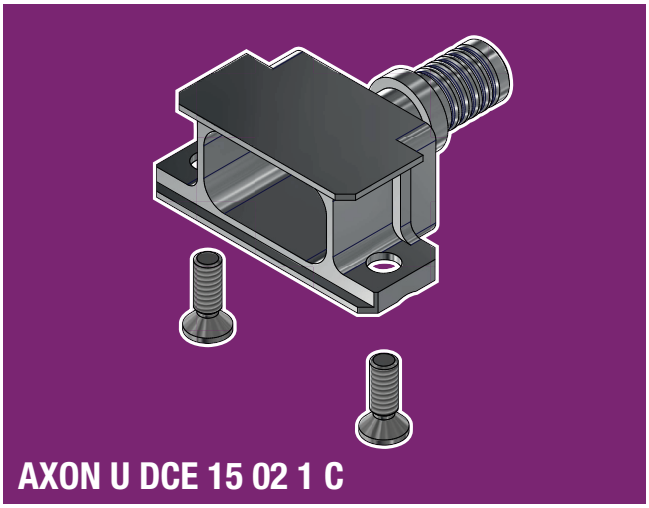

AXON U DCE 15 02 1 C

MICRO-D D-CLICK® BACKSHELLS

IDENTIFICATION CODE

AXON	U	DCE	15	02	1	C

SERIES

STYLE TYPE

U: Top entry.
ZA: Side entry (on top*).
ZB: Side entry (on bottom*).
FA: 45° edge entry (on the left*).
FB: 45° edge entry (on the right*).

VARIANT

DCE: D-Click® connectors variant.

CONNECTOR SIZE

09, **15**, **21**, **25**, **31**, **37**, **51**.
Number of ways for the corresponding connector

ENTRY SIZE & TYPE

Circular entries: 01 to **10** (05 to 10: only for ZA & ZB style type).
Elliptical entries: 04E: to **08E** (08E: not for FA & FB style type).
See page 81 to 83 for dimensions.
Other entry sizes available on request.

MATERIAL

1: Aluminium.
Other materials available on request.

PLATING OPTION

C: Electroless nickel per SAE-AMS-2404, class 4, (13 µm/.0005 min).
Other platings available on request.

See page 81 to 83 for dimensions.

* when facing the connector with widest side of the D-shape up.

Backshells are supplied with passivated stainless steel hex drive flat head M2 screws.

©2018, AXON'CABLE - RELEASED SEPTEMBER 2025/C - www.axon-cable.com

U TYPE

DIMENSIONS

Dimensions are in millimetres (inches).

BACKSHELL

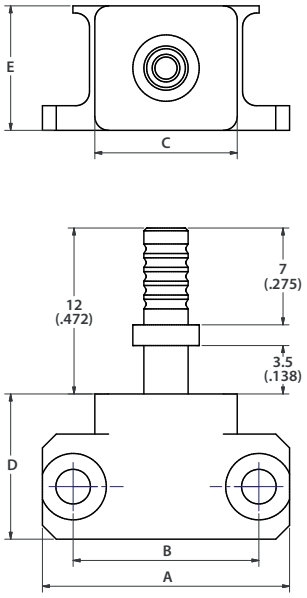

SHELL SIZE	A	B	C	D	E
9	17.87 (.704)	13.43 (.529)	10.30 (.406)	10.50 (.413)	9.00 (.354)
15	21.68 (.854)	17.24 (.679)	14.00 (.551)	10.50 (.413)	9.00 (.354)
21	25.49 (1.003)	21.05 (.832)	17.90 (.705)	11.50 (.453)	9.00 (.354)
25	28.03 (1.104)	23.59 (.929)	20.50 (.807)	13.50 (.531)	9.00 (.354)
31	31.80 (1.252)	27.36 (1.077)	24.10 (.949)	14.50 (.571)	9.00 (.354)
37	35.65 (1.404)	31.21 (1.229)	28.10 (1.106)	15.50 (.610)	9.00 (.354)
51	34.38 (1.354)	29.94 (1.179)	26.70 (1.051)	16.50 (.650)	10.00 (.394)

CIRCULAR ENTRY

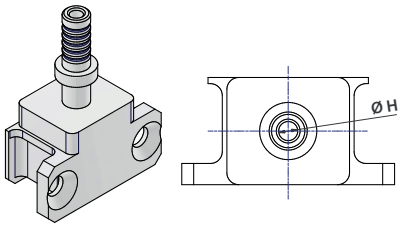

ENTRY SIZE	SHELL SIZE	Ø H
01	09-51	1.6 (.063)
02	09-51	3.2 (.126)
03	09-51	4.8 (.189)
04	51	6.4 (.252)

ELLIPTICAL ENTRY

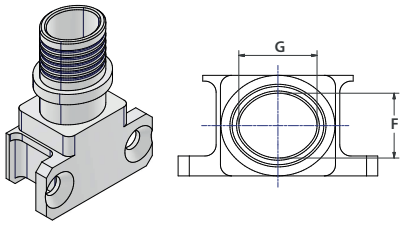

ENTRY SIZE	SHELL SIZE	F	G
04E	09-51	5.8 (.228)	7.0 (.276)
05E	15-51	5.8 (.228)	10.8 (.425)
06E	25-51	5.8 (.228)	15.2 (.598)
07E	37-51	5.8 (.228)	20.1 (.791)
08E	51	6.8 (.268)	22.8 (.898)

These backshells can be used only with pigtail connectors equipped with D-Click® latch springs.

©2018, AXON'CABLE - RELEASED SEPTEMBER 2025/C - www.axon-cable.com

ZA & ZB TYPE

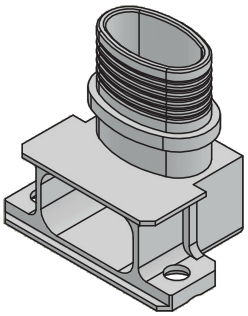

DIMENSIONS

Dimensions are in millimetres (inches).

ORIENTATION

ZA

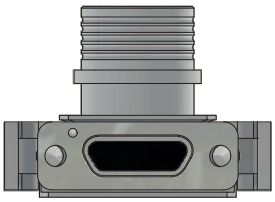

ZB

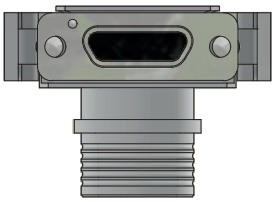

BACKSHELL

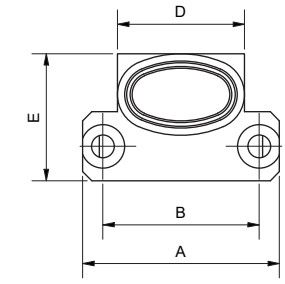

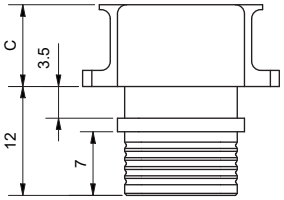

SHELL SIZE	A	B	C	D	E
9	17.87 (.704)	13.43 (.529)	9.00 (.354)	10.30 (.406)	12.50 (.492)
15	21.68 (.854)	17.24 (.679)	9.00 (.354)	14.00 (.551)	14.00 (.551)
21	25.49 (1.003)	21.05 (.832)	9.00 (.354)	17.90 (.705)	15.50 (.610)
25	28.03 (1.104)	23.59 (.929)	9.00 (.354)	20.50 (.807)	17.50 (.689)
31	31.80 (1.252)	27.36 (1.077)	9.00 (.354)	24.10 (.949)	18.50 (.728)
37	35.65 (1.404)	31.21 (1.229)	9.00 (.354)	28.10 (1.106)	19.50 (.768)
51	34.38 (1.354)	29.94 (1.179)	10.00 (.394)	26.70 (1.051)	20.50 (.807)

CIRCULAR ENTRY

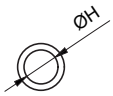

ENTRY SIZE	SHELL SIZE	Ø H
01	09-51	1.6 (.063)
02	09-51	3.2 (.126)
03	09-51	4.8 (.189)
04	09-51	6.4 (.252)
05	15-51	8.0 (.315)
06	21-51	9.5 (.374)
07	25-51	11.1 (.437)
08	31-51	12.7 (.500)
09	37-51	14.3 (.563)
10	51	15.9 (.625)

ELLIPTICAL ENTRY

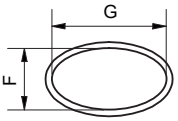

ENTRY SIZE	SHELL SIZE	F	G
04E	09-51	5.8 (.228)	7.0 (.276)
05E	15-51	5.8 (.228)	10.8 (.425)
06E	25-51	5.8 (.228)	15.2 (.598)
07E	37-51	5.8 (.228)	20.1 (.791)
08E	51	6.8 (.268)	22.8 (.898)

These backshells can be used only with pigtail connectors equipped with D-Click® latch springs.

©2018, AXON'CABLE - RELEASED SEPTEMBER 2025/C - www.axon-cable.com

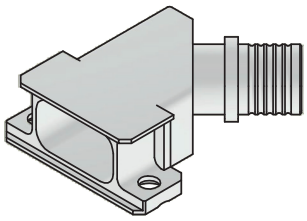

FA & FB TYPE

DIMENSIONS

Dimensions are in millimetres (inches).

ORIENTATION

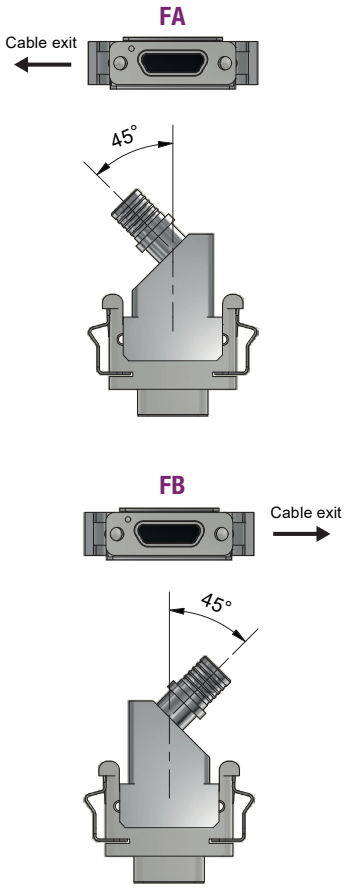

BACKSHELL

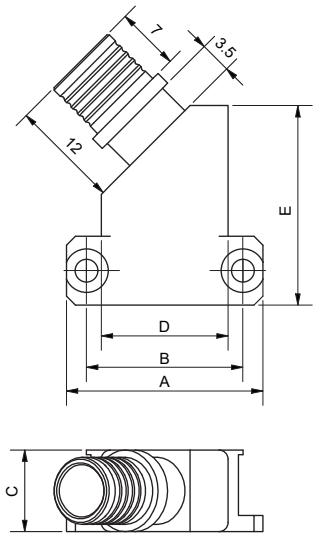

SHELL SIZE	A	B	C	D	E
9	17.87 (.704)	13.43 (.529)	9.00 (.354)	10.30 (.406)	19.00 (.748)
15	21.68 (.854)	17.24 (.679)	9.00 (.354)	14.00 (.551)	22.00 (.866)
21	25.49 (1.003)	21.05 (.832)	9.00 (.354)	17.90 (.705)	24.00 (.945)
25	28.03 (1.104)	23.59 (.929)	9.00 (.354)	20.50 (.807)	26.00 (1.024)
31	31.80 (1.252)	27.36 (1.077)	9.00 (.354)	24.10 (.949)	27.00 (1.063)
37	35.65 (1.404)	31.21 (1.229)	9.00 (.354)	28.10 (1.106)	29.00 (1.141)
51	34.38 (1.354)	29.94 (1.179)	10.00 (.394)	26.70 (1.051)	31.00 (1.220)

CIRCULAR ENTRY

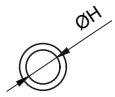

ENTRY SIZE	SHELL SIZE	Ø H
01	09-51	1.6 (.063)
02	09-51	3.2 (.126)
03	09-51	4.8 (.189)
04	51	6.4 (.252)

ELLIPTICAL ENTRY

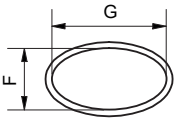

ENTRY SIZE	SHELL SIZE	F	G
04E	21-51	5.8 (.228)	7.0 (.276)
05E	25-51	5.8 (.228)	10.8 (.425)
06E	37-51	5.8 (.228)	15.2 (.598)
07E	51	6.8 (.268)	17.7 (.697)

These backshells can be used only with pigtail connectors equipped with D-Click® latch springs.

©2018, AXON'CABLE - RELEASED SEPTEMBER 2025/C - www.axon-cable.com

AXOCLAMP® EMI BAND TERMINATION

Material: Stainless steel 300 series.
360° shield termination for connectors can be carried out with a patented metal band called AXOCLAMP®. This ensures the continuity of shielding efficiency at the cable / connector junction.

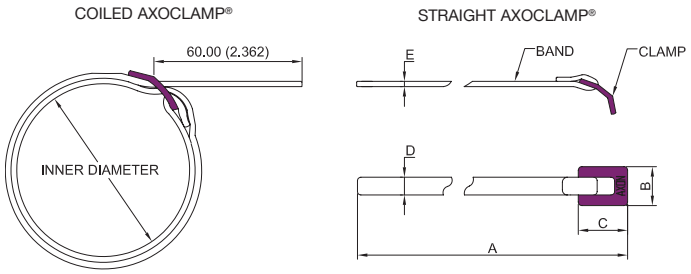

IDENTIFICATION CODE

AXCL	01
AXOCLAMP®	BAND TYPES 01: standard 03: microband double wrapped

The standard version is coiled but straight AXOCLAMP® can be delivered on request (reference example AXCL03D). Minimum quantity: 100 pieces per reference.

DIMENSIONS

Dimensions are in millimetres (inches).

SPECIFICATIONS	AXOCLAMP® STANDARD	AXOCLAMP® MICROBAND
REFERENCE	**AX CL 01**	**AX CL 03**
DIMENSION A	375 (14.764)	200 (7.874)
DIMENSION B	9 (.364)	5.2 (.205)
DIMENSION C	10 (.394)	5.5 (.217)
DIMENSION D	5.9 (.232)	3 (.118)
DIMENSION E	0.5 (.020)	0.35 (.014)
MINIMUM DIAMETER*	10 (.394)	5 (.197)
MAXIMUM DIAMETER*	40 (1.575)	15 (.591)

*: Minimum and maximum diameter of the rear funnel on which the AXOCLAMP® can be mounted.
For other dimensions, please consult us.

BANDING TOOLS

	MANUAL HAND TOOL	CLAMPING VALUES	PNEUMATIC CLAMPING TOOL	RECOMMANDED BANDING VALUES*	CALIBRATION DEVICE
AXOCLAMP® AX CL 01	A 40199	100-180 LBS	A 35199	160	A 50099
AXOCLAMP® AX CL 03	A 30199	60-100 LBS	A 35599	90	A 50099

*: Banding values are given for information only.

©2018, AXON'CABLE - RELEASED SEPTEMBER 2025/C - www.axon-cable.com

© 2019 AXON' CABLE – RELEASED SEPTEMBER 2025/C – ALL RIGHTS RESERVED

CELLOFLON®: REGISTERED TRADEMARKS of AXON' CABLE SAS
Photos: Nickelkrome, Bastien Guilbert

All information contained in this brochure can be changed without prior notice.

>> AUSTRALIA
AXON' CONNECT PTY LTD
TEL.: +61 417 284 674
sales.australia@axon-cable.com

>> BRAZIL
AXON' CABLE INDUSTRIA E COMÉRCIO LTDA
TEL.: +55 21 3596-8002
salesbrazil@axon-cable.com

>> CANADA
AXON' CÂBLAGE INC./AXON' WIRING INC.
TEL.: +1 514 898 2044
sales@axoncable.com

>> CHINA
AXON' INTERCONNECT LTD
TEL.: +86 757 2838 7200
FAX: +86 757 2838 7212
sales@axon-interconnect.com

>> GERMANY
AXON' KABEL GmbH
TEL.: +49 7152-97992-0
sales@axon-cable.de

>> HUNGARY
AXON' KÁBELGYÁRTÓ KFT.
TEL.: +36 76 508 195
axon@axon-cable.hu

>> INDIA
AXON' INTERCONNECTORS AND WIRES PVT LTD
TEL.: +91 806 816 2966
FAX: +91 806 816 2999
sales@axon-cable.in

DHRUV AXON': YOUR OFFSET PARTNER IN INDIA

>> JAPAN
AXON' CABLE JAPAN OFFICE
TEL./FAX: +81 26 217 6728
axon-japan@axon-cable.com

>> LATVIA
AXON' CABLE SIA
TEL.: +371 6540 78 91
axon@axoncable.lv

>> MEXICO
AXON' INTERCONEX, S.A. DE C.V.
TEL: +52 442 215 2713
axon-mexico@axoncable.com.mx

>> SINGAPORE
AXON' CONNECT PTE LTD
TEL.: +65 6250 3169
sales.singapore@axon-cable.com

>> SPAIN
AXON' CABLE SPANISH OFFICE
TEL.: +34 911 309 123
axon-spain@axon-cable.com

>> UNITED KINGDOM
AXON' CABLE LTD
TEL.: +44 1383 421500
sales@axon-cable.co.uk

>> USA
AXON' CABLE INC.
TEL.: +1 847 230 7800
sales@axoncable.com

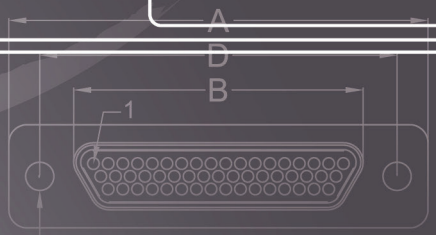

9-51 contacts : 2.49 (
2.44/2.24 (.096/.088) MA
100contacts :

VISIT OUR WEBSITE
www.axon-cable.com

FOLLOW US

HEADQUARTERS
>> France

>> AXON' CABLE S.A.S.
2 ROUTE DE CHALONS EN CHAMPAGNE - 51210 MONTMIRAIL
TEL.: +33 3 26 81 70 00 - FAX: +33 3 26 81 28 83
e-mail : sales@axon-cable.com - www.axon-cable.com

axon' cables & connectors